APPROVED: _____ STAFF APPROVAL DATE

APPROVED: _____ ENGINEERING DEPT. APPROVAL DATE

APPROVED: _____ LANDSCAPE ARCHITECT APPROVAL DATE

PRIMARY BENCHMARK:
TOC/BOC ELEV @ P/L
IN FRONT OF SUBLOT'S 141/142
ELEV. = 1007.00

SECONDARY BENCHMARK
TOP STEM OF HYDRANT
IN FRONT OF SUBLOT'S 141/142
ON RIDGELINE DRIVE
ELEV. = 1009.74

THE CONTRACTOR MUST CHECK THE BENCHMARK WITH THE CURB GRADES PRIOR TO DIGGING THE FOUNDATION.

BUILDER: PULTE HOMES OF OHIO, LLC.
ADDRESS: 387 MEDINA ROAD SUITE 1700, MEDINA, OHIO 44256
PHONE: 330-239-1587

OWNER: _____
ADDRESS: _____
PHONE: _____

NOTE:
ALL PROPOSED FOOTERS WILL REQUIRE SURVEY CERTIFICATION ONCE SET AND PRIOR TO THE COMPLETION OF HOME CONSTRUCTION

STATE OF OHIO
STAN R. LOCH
8249
REGISTERED
PROFESSIONAL SURVEYOR

NOTE:
FINAL LOCATION OF (3) TREES TO BE DETERMINED AND INSTALLED BY PURCHASER IN COMPLIANCE WITH CITY OF HUDSON LAND DEVELOPMENT CODE (1207.04J).

INITIAL SITE BENCHMARK:
SUMMIT COUNTY GEODETIC MONUMENT HU 118
STATE PLAN COORDINATE
N 572,745.649
E 2,250,912.641
ELEVATION = 1006.912 NAVD 1988

NOTES:
DOWNSPOUTS TO BE CONNECTED TO STORM SEWER CONNECTION

SUMP PUMP REQUIRED FOR FOOTER DRAINS

NOTE:
PURCHASER TO INSTALL MINIMUM OF 3 TREES PER MUNICIPAL REQUIREMENTS

NOTE:
PURCHASER TO INSTALL LANDSCAPING PER CITY OF HUDSON LANDSCAPING REQUIREMENTS.

NOTE:
PER ARB, EGRESS WINDOW WELLS SHOULD BE NO MORE THAN 6" ABOVE FINISHED GRADE

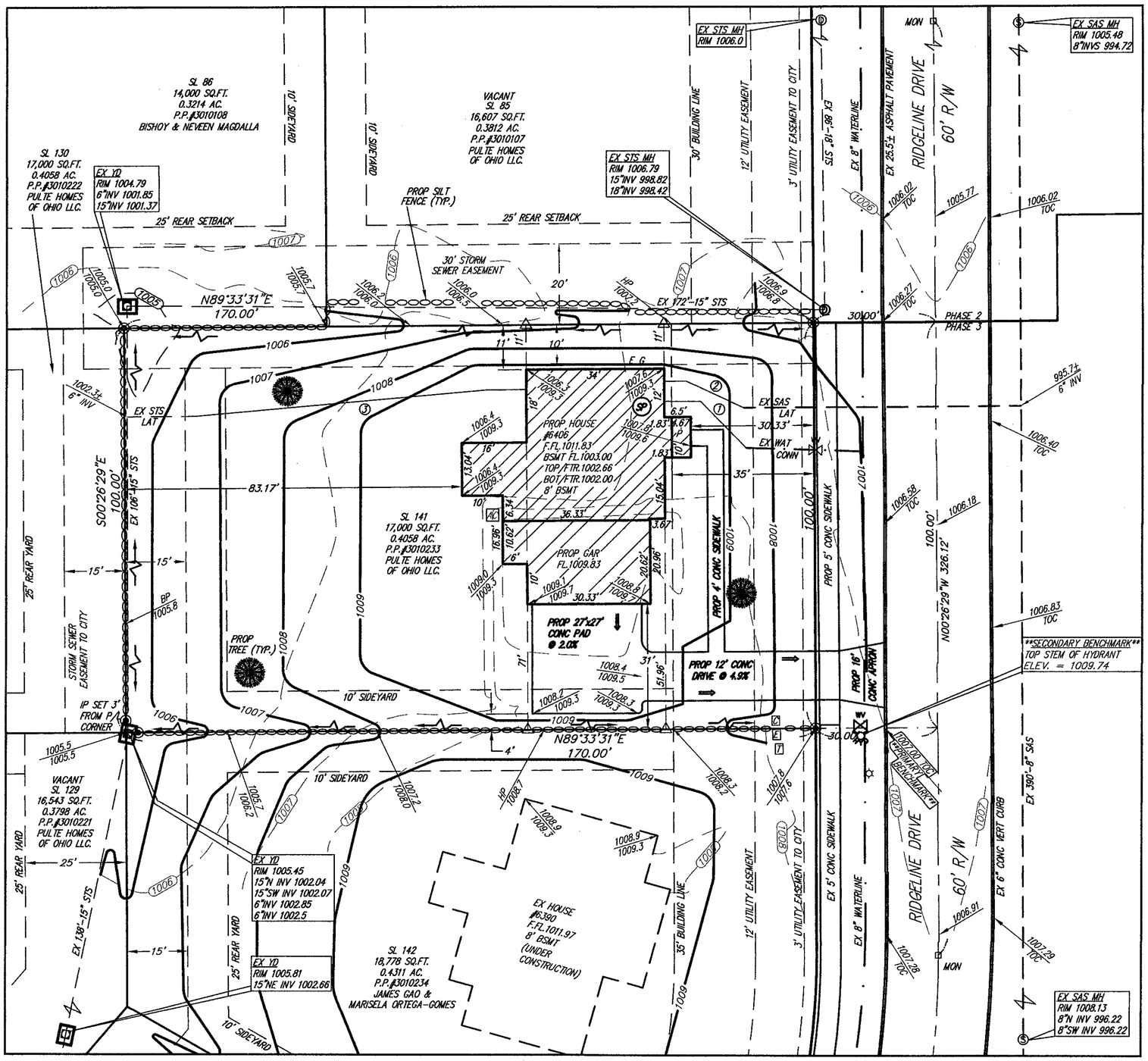

GRAPHIC SCALE

20 0 10 20

(IN FEET) 1 inch = 20 ft.

PERCENTAGE OF LOT COVERAGE = 23.0%

HOUSE COVERAGE = 2,368 SQ.FT.
DRIVEWAY COVERAGE = 1,311 SQ.FT.
WALKWAY COVERAGE = 235 SQ.FT.
TOTAL COVERAGE = 3,914 SQ.FT.

DATE OF SURVEY:
JUNE 28th, 2019

TYPE OF HOUSE:
PLAN# HOLBROOK
ELEVATION: 1
GAR: 3 CAR SIDE LEFT W/8' BASEMENT, SUNROOM & FIREPLACE

① = PROP 1" WAT CONN
② = PROP 6" PVC SAS CONN @ 1.0% MIN 10% MAX
③ = PROP 6" PVC STS CONN @ 1.0% MIN 10% MAX

LEGEND:
- = PROPOSED TREE
- = EX MONUMENT
- = EX CURB INLET
- = EX SANITARY MANHOLE
- = EX YARD DRAIN
- = IRON PIN SET 5/8"X.30" REBAR CAPPED "AZTECH #8249"
- EXISTING GRADE / PROPOSED GRADE
- = PROP SILT FENCE
- = INLET PROTECTION
- = EX HYDRANT
- = EX WATER VALVE
- = SUMP PUMP
- = EX STORM MANHOLE
- = SWALE
- = FLOW ARROW
- = AIR CONDITIONER
- E = ELECTRIC CONNECTION
- G = GAS CONNECTION
- = OFFSET HUB
- = ELECTRIC BOX
- = STUB
- = LIGHT POST

STATE OF OHIO
STAN LOCH
E #63332
REGISTERED
PROFESSIONAL ENGINEER

I CERTIFY THAT THIS PLAN WAS PREPARED BY ME AND IS CORRECT TO THE BEST OF MY KNOWLEDGE AND BELIEF.

7-23-19
STAN R. LOCH P.E. #63332 DATE

5425 WARNER ROAD - SUITE 12
VALLEY VIEW, OHIO 44125
440-602-9071
AZTECH
FAX 216-369-0259
ENGINEERING and SURVEYING
Civil Engineering · Land Surveying

SHEET CONTENT

SITE PLAN
FOR
PULTE HOMES
SUBLOT 141
6406 RIDGELINE DRIVE
IN THE
RESERVE AT RIVER OAKS SUBDIVISION PH.3
SITUATED IN THE
CITY OF HUDSON
COUNTY OF SUMMIT
STATE OF OHIO

REVISIONS

NO.	DATE	DESCRIPTION	BY
1	7/23/19	MOVE HOUSE FORWARD	KEG

HORIZ. SCALE: 1" = 20'	VERT. SCALE:
DRAWN BY: KEG	DATE: 7-1-2019
CHECKED BY: SRL	DRAWING NO: Site-Plans
JOB NO: 20142977-3	SHEET: 1 OF 1

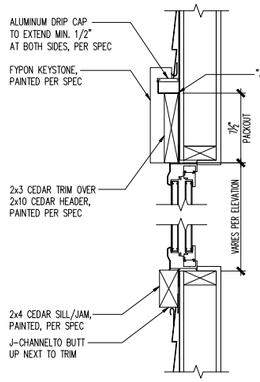

HEAD AND SILL

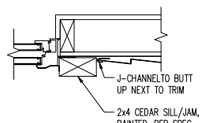

JAMB

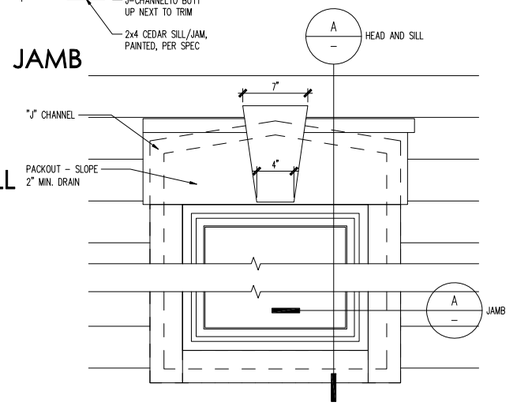

A WNDW TRIM DETAIL

SCALE: 1 1/2"=1'-0"

REAR ELEVATION

SCALE 1/4" = 1'-0"

FRONT ELEVATION

SCALE 1/4" = 1'-0"

(c) Copyright PulteGroup, Inc. - 2011

Cleveland Division
387 Medina Rd. Suite 1700
Medina, OH 44256

Pulte Homes

NOTE: SCALES NOTED ON DRAWINGS RELATE TO FULL SIZE PLOTS ON 22x34 SHEETS - 11x17 SHEETS REPRESENT 1/2 SCALE PLOTS

Front Elevation - 1

Front and Rear Elevations

PRODUCTION MANAGER
Jamey Heinzman
CURRENT RELEASE DATE: 03/21/2018

REV #	DATE / DESCRIPTION
△	
△	
△	
△	
△	
△	
△	
△	

ENGINEER OF RECORD: MULHERN & KULP ENGINEERING -
ARCHITECT OF RECORD: GODUCO DESIGN - ARCHITECTS

PROJECT TYPE
SINGLE FAMILY

COMMUNITY NAME
RIVER OAKS
LOT 141

LAWSON COMMUNITY ID

GARAGE HANDING
GARAGE LEFT

SPECIFICATION LEVEL
TBD

PLAN NAME
HOLBROOK

NPC PLAN NUMBER
TBD

LAWSON PLAN ID

LEGACY PLAN NUMBER / NAME
PLAN 3140

SHEET
7.01a1

PLOTTED: June 28, 2019 / Annie Lee / PLAN-3140-RO-EL01.DWG

ATTIC VENTILATION SCHEDULE

1 ELEVATION		1ST FLOOR ROOF			2ND FLOOR ROOF			N/A			N/A			N/A		
	LOC	AREA	REQ'D	SUPP	AREA	REQ'D	SUPP	AREA	REQ'D	SUPP	AREA	REQ'D	SUPP	AREA	REQ'D	SUPP
	RIDGE	359	0.60	2.06	2078	3.47	7.38									
	EAVE		0.60	2.06		3.47	6.13									
	TOTAL		1.20	4.12		2.96	13.51									

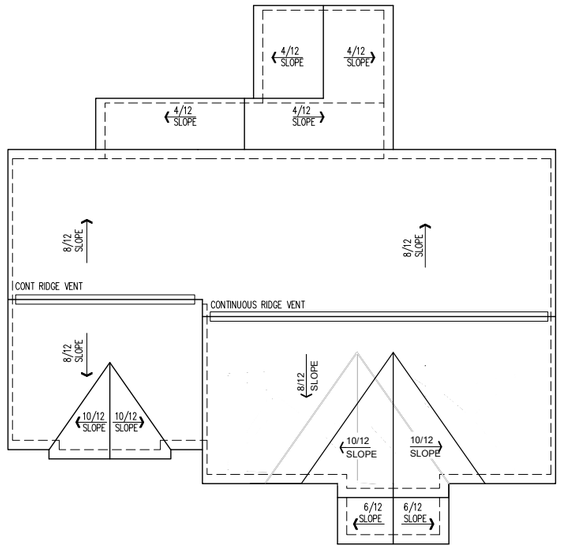

ROOF PLAN

SCALE 1/8" = 1'-0"

LEFT ELEVATION

SCALE 1/4" = 1'-0"

RIGHT ELEVATION

SCALE 1/4" = 1'-0"

(c) Copyright PulteGroup, Inc. - 2011

Cleveland Division
387 Medina Rd. Suite 1700
Medina, OH 44256

Pulte Homes

NOTE: SCALES NOTED ON DRAWINGS RELATE TO FULL SIZE PLOTS ON 22x34 SHEETS - 11x17 SHEETS REPRESENT 1/2 SCALE PLOTS

Front Elevation - 1
Side Elevations & Roof Plan

PRODUCTION MANAGER
Jamey Heinzman
CURRENT RELEASE DATE: 03/21/2018

REV #	DATE / DESCRIPTION
△	
△	
△	
△	
△	
△	
△	
△	

ENGINEER OF RECORD: MULHERN & KUIP ENGINEERING
ARCHITECT OF RECORD: GODUCO DESIGN - ARCHITECTS

PROJECT TYPE
SINGLE FAMILY

COMMUNITY NAME
RIVER OAKS
LOT 141
LAWSON COMMUNITY ID

GARAGE HANDING
GARAGE LEFT

SPECIFICATION LEVEL
TBD

PLAN NAME
HOLBROOK
NPC PLAN NUMBER
TBD
LAWSON PLAN ID

LEGACY PLAN NUMBER / NAME
PLAN 3140

SHEET
7.01a2

PLOTTED: June 28, 2019 / Annie Lee / PLAN-3140-RO-ELO1.DWG

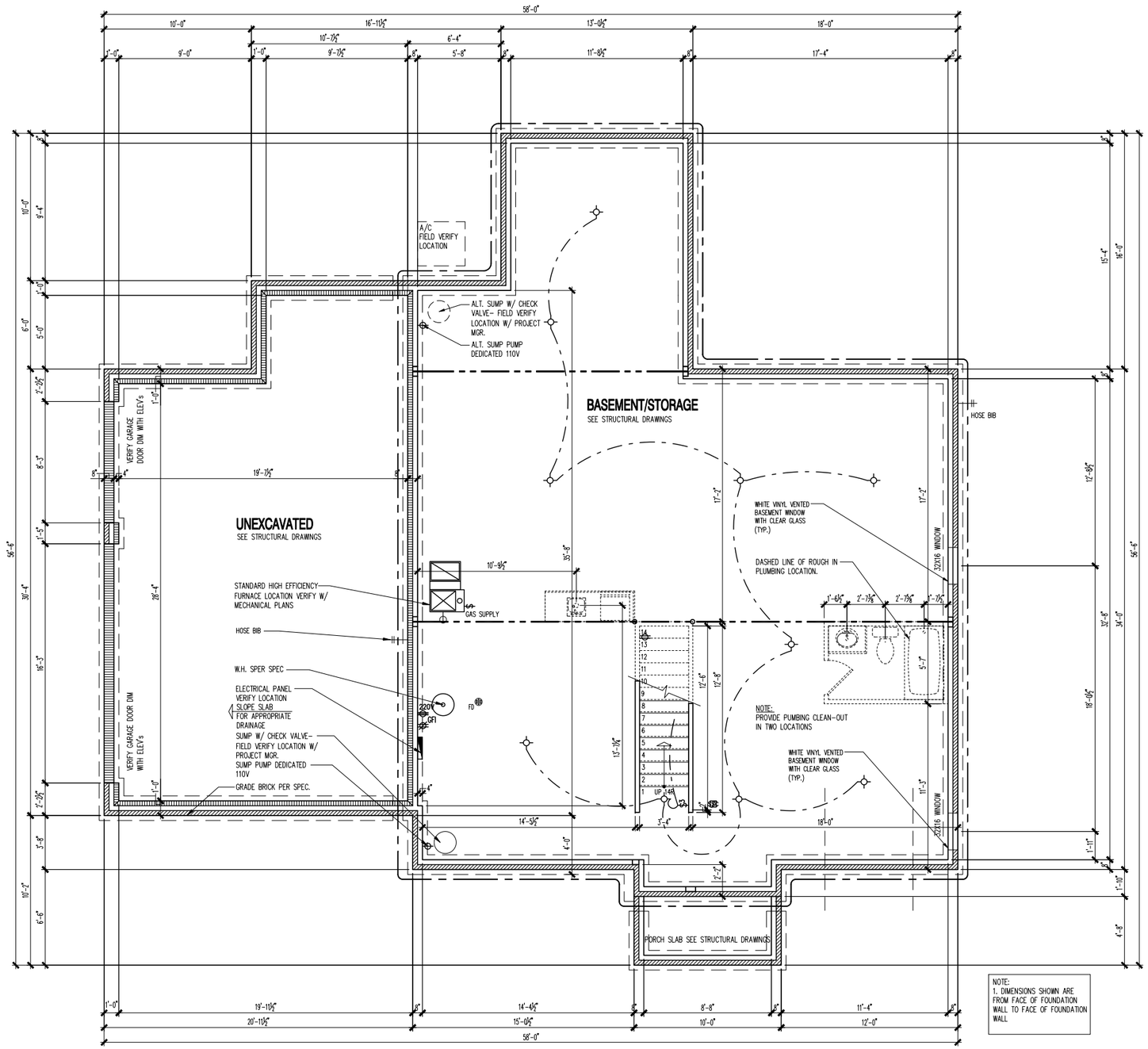

NOTE:
1. DIMENSIONS SHOWN ARE FROM FACE OF FOUNDATION WALL TO FACE OF FOUNDATION WALL

FOUNDATION PLAN

1/4" = 1'-0"

(c) Copyright PulteGroup, Inc. - 2011

Cleveland Division
387 Medina Rd. Suite 1700
Medina, OH 44256

Pulte Homes

Full Basement Foundation Plan

PRODUCTION MANAGER
Jamey Heinzman
CURRENT
RELEASE DATE: 03/21/2018

REV #	DATE / DESCRIPTION
△	
△	
△	
△	
△	
△	
△	
△	

NOTE: SCALES NOTED ON DRAWINGS RELATE TO FULL SIZE PLOTS ON 22x34 SHEETS - 11x17 SHEETS REPRESENT 1/2 SCALE PLOTS

PROJECT TYPE
SINGLE FAMILY

COMMUNITY NAME
RIVER OAKS
LOT 141
LAWSON COMMUNITY ID

GARAGE HANDING
GARAGE LEFT

SPECIFICATION LEVEL
TBD

PLAN NAME
HOLBROOK
NPC PLAN NUMBER
TBD
LAWSON PLAN ID

LEGACY PLAN NUMBER / NAME
PLAN 3140

SHEET
1.30a

ENGINEER OF RECORD: MULHERN & KULP ENGINEERING
ARCHITECT OF RECORD: GODUCO DESIGN - ARCHITECTS

PLOTTED: June 28, 2019 / Annie Lee / PLAN-3140-RO-PLAN.DWG

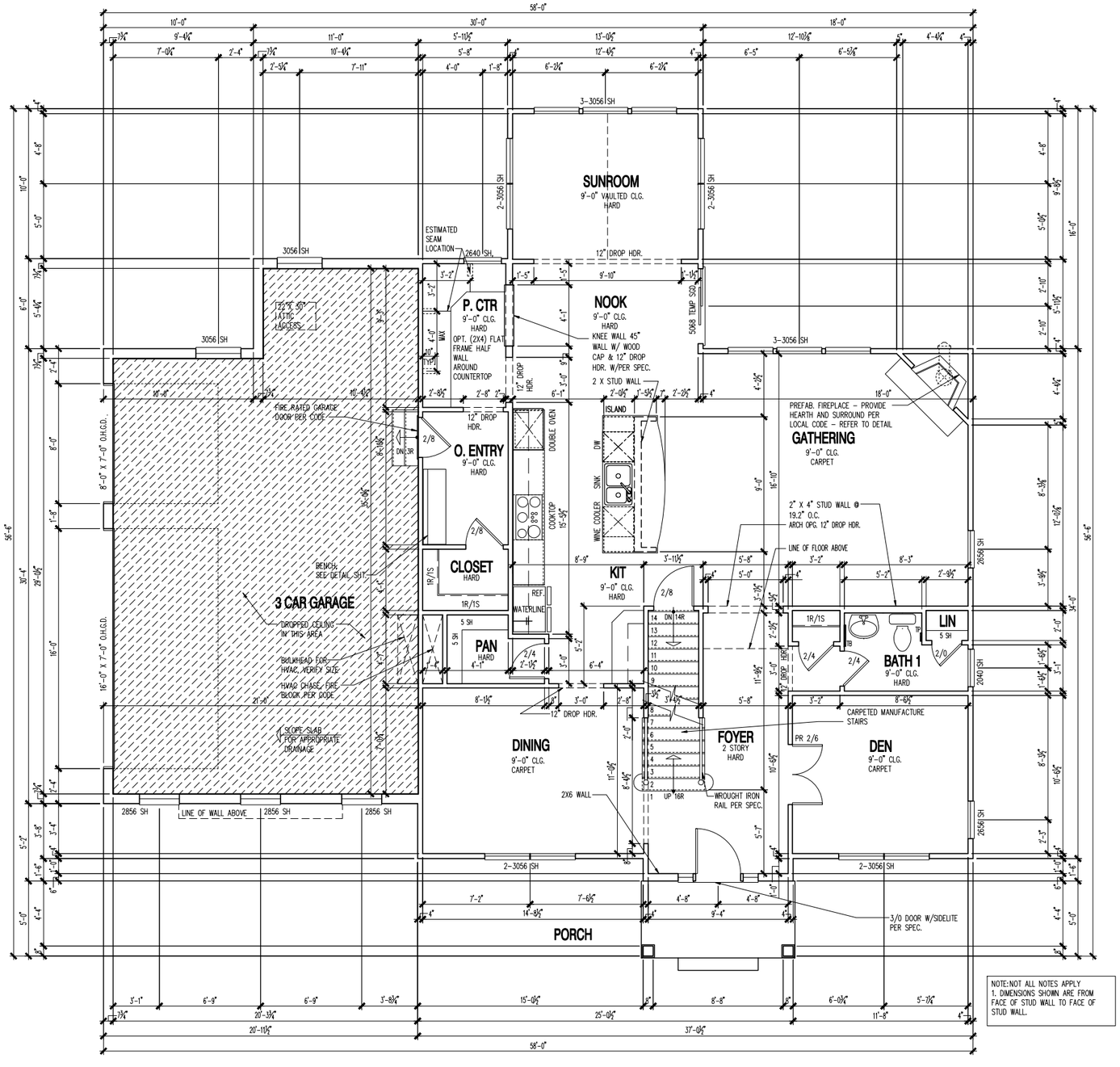

NOTE:NOT ALL NOTES APPLY
1. DIMENSIONS SHOWN ARE FROM FACE OF STUD WALL TO FACE OF STUD WALL.

FIRST FLOOR PLAN

1/4" = 1'-0"

(c) Copyright PulteGroup, Inc. - 2011

Cleveland Division
387 Medina Rd. Suite 1700
Medina, OH 44256

Pulte Homes

NOTE: SCALES NOTED ON DRAWINGS RELATE TO FULL SIZE PLOTS ON 22x34 SHEETS - 11x17 SHEETS REPRESENT 1/2 SCALE PLOTS

First Floor Plan

PRODUCTION MANAGER
Jamey Heinzman
CURRENT RELEASE DATE: 03/21/2018

REV #	DATE / DESCRIPTION
△	
△	
△	
△	
△	
△	
△	
△	

ENGINEER OF RECORD: MULHERN & KULP ENGINEERING
ARCHITECT OF RECORD: GODLICO DESIGN - ARCHITECTS

PROJECT TYPE
SINGLE FAMILY

COMMUNITY NAME
RIVER OAKS
LOT 141

LAWSON COMMUNITY ID

GARAGE HANDING
GARAGE LEFT

SPECIFICATION LEVEL
TBD

PLAN NAME
HOLBROOK

NPC PLAN NUMBER
TBD

LAWSON PLAN ID

LEGACY PLAN NUMBER / NAME
PLAN 3140

SHEET
2.10a

PLOTTED: June 28, 2019 / Annie Lee / PLAN-3140-RO-PLANLDWG

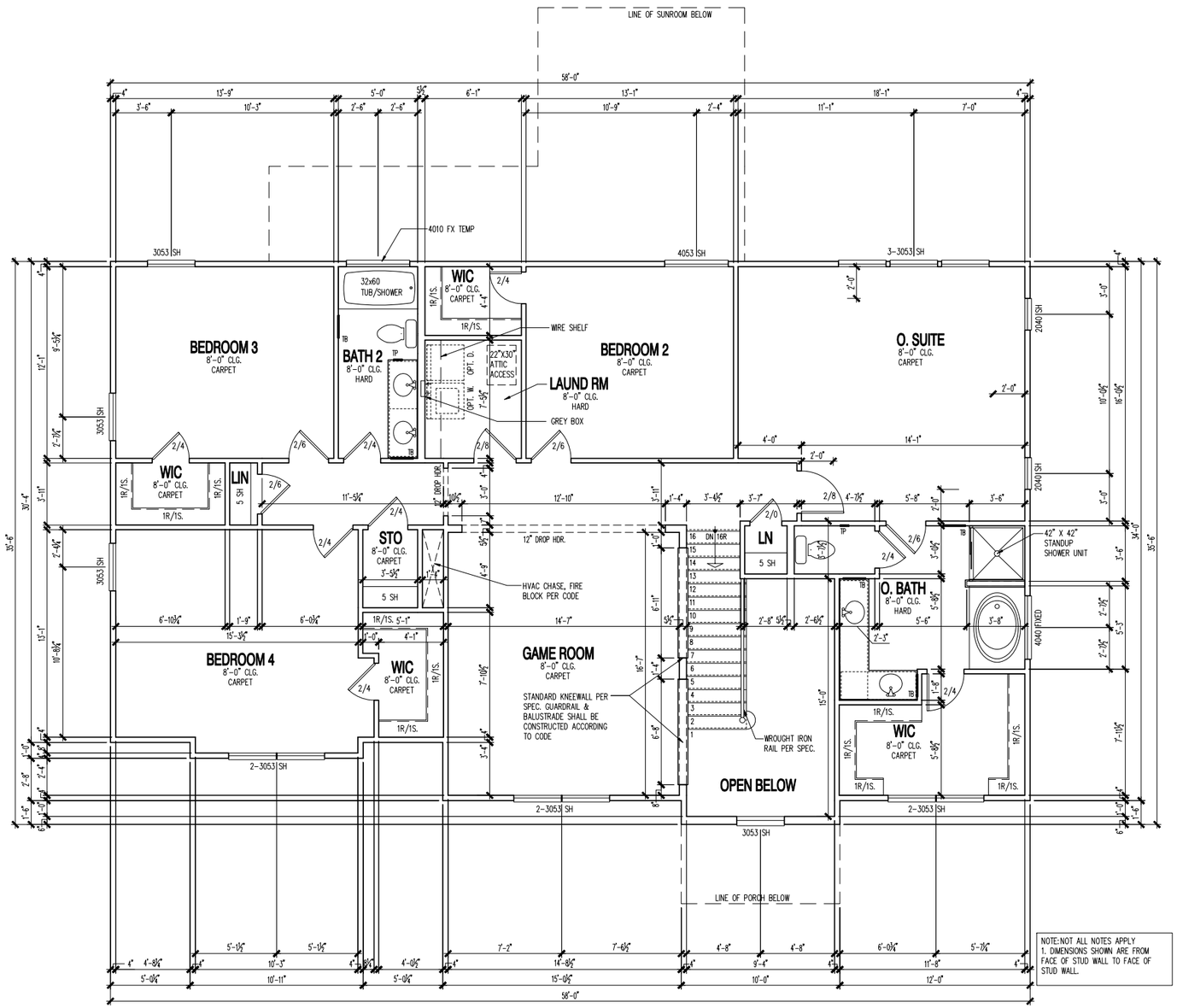

NOTE:NOT ALL NOTES APPLY
1. DIMENSIONS SHOWN ARE FROM FACE OF STUD WALL TO FACE OF STUD WALL.

SECOND FLOOR PLAN

1/4" = 1'-0"

PLOTTED: June 28, 2019 / Annie Lee / PLAN_3140-RO-PLAN.DWG

(c) Copyright PulteGroup, Inc. - 2011

Cleveland Division
387 Medina Rd. Suite 1700
Medina, OH 44256

Pulte Homes

Second Floor Plan

PRODUCTION MANAGER
Jamey Heinzman
CURRENT RELEASE DATE: 03/21/2018

REV #	DATE / DESCRIPTION
△	
△	
△	
△	
△	
△	
△	
△	

NOTE: SCALES NOTED ON DRAWINGS RELATE TO FULL SIZE PLOTS ON 22x34 SHEETS - 11x17 SHEETS REPRESENT 1/2 SCALE PLOTS

PROJECT TYPE
SINGLE FAMILY

COMMUNITY NAME
RIVER OAKS
LOT 141
LAWSON COMMUNITY ID

GARAGE HANDING
GARAGE LEFT

SPECIFICATION LEVEL
TBD

PLAN NAME
HOLBROOK
NPC PLAN NUMBER
TBD
LAWSON PLAN ID

LEGACY PLAN NUMBER / NAME
PLAN 3140

SHEET
2.20a

ENGINEER OF RECORD: MULHERN & KULP ENGINEERING
ARCHITECT OF RECORD: GODUCO DESIGN - ARCHITECTS

CURVE TABLE																							
CURVE	RADIUS	LENGTH	TANGENT	CHORD	BEARING	DELTA	CURVE	RADIUS	LENGTH	TANGENT	CHORD	BEARING	DELTA	CURVE	RADIUS	LENGTH	TANGENT	CHORD	BEARING	DELTA	CURVE	RADIUS	LENGTH	TANGENT	CHORD	BEARING	DELTA
C1	300.00'	209.44'	115.47'	205.08'	N35°36'28"W	69°09'00"	C11	60.00'	69.00'	32.78'	57.53'	N53°19'02"E	67°17'46"	C21	30.00'	47.12'	30.00'	42.43'	N74°33'31"E	90°00'00"	C29	60.00'	94.25'	60.00'	84.85'	N44°33'31"E	90°00'00"
C2	300.00'	104.72'	53.00'	103.53'	N14°33'31"E	20°00'00"	C12	60.00'	78.17'	43.42'	70.33'	N52°08'41"W	77°46'46"	C22	170.00'	89.38'	45.75'	78.63'	N46°53'28"W	27°58'07"	C30	30.00'	47.12'	30.00'	42.43'	N45°26'29"W	90°00'00"
C3	330.00'	17.83'	8.92'	17.82'	N01°46'43"E	4°36'25"	C13	60.00'	6.98'	4.00'	6.98'	N31°06'38"W	6°39'15"	C23	170.00'	97.65'	50.23'	96.32'	N19°53'36"W	32°54'53"	C31	60.00'	94.25'	60.00'	84.85'	N45°33'31"W	90°00'00"
C4	330.00'	63.62'	42.35'	63.16'	N14°34'16"E	26°46'46"	C14	30.00'	37.68'	19.87'	35.53'	N38°46'14"W	43°39'30"	C24	30.00'	47.12'	30.00'	42.43'	N45°26'29"W	90°00'00"	C32	60.00'	78.69'	46.46'	73.09'	N52°11'36"E	74°34'06"	C40	30.00'	47.12'	30.00'	42.43'	N44°33'31"E	90°00'00"
C5	330.00'	16.99'	8.50'	16.98'	N27°11'37"E	4°43'47"	C15	330.00'	37.53'	18.81'	37.49'	N39°46'06"W	6°30'56"	C25	60.00'	15.16'	7.62'	15.13'	N07°06'46"W	14°28'36"	C33	60.00'	33.17'	11.73'	33.03'	N44°08'28"W	31°39'46"	C41	60.00'	69.00'	32.78'	57.53'	N53°19'02"E	67°17'46"
C6	30.00'	47.12'	30.00'	42.43'	N53°26'29"W	90°00'00"	C16	330.00'	25.96'	13.00'	25.95'	N47°51'25"W	6°38'15"	C26	60.00'	96.00'	32.78'	57.53'	N43°34'06"W	87°17'46"	C34	60.00'	69.00'	32.78'	57.53'	N36°58'02"E	67°17'46"	C42	60.00'	69.00'	32.78'	57.53'	N36°58'02"E	67°17'46"
C7	30.00'	37.68'	19.87'	35.53'	N63°08'44"W	43°39'30"	C17	330.00'	88.19'	44.38'	84.70'	N34°50'41"W	21°13'14"	C27	60.00'	69.00'	32.78'	57.53'	N70°05'16"E	67°17'46"	C35	60.00'	9.93'	4.97'	9.93'	N03°58'16"E	9°28'30"	C43	30.00'	47.12'	30.00'	42.43'	N44°33'31"E	90°00'00"
C8	30.00'	94.40'	59.34'	53.98'	N77°47'26"W	91°00'00"	C18	330.00'	88.19'	44.38'	84.70'	N12°47'27"W	21°13'14"	C28	60.00'	94.40'	59.34'	53.98'	N19°29'26"E	91°00'00"							
C9	60.00'	69.00'	32.78'	57.53'	N23°00'00"W	67°17'46"	C19	330.00'	6.98'	3.49'	6.98'	N01°46'28"W	1°14'28"	C29	60.00'	94.35'	59.31'	52.92'	N37°26'26"W	91°14'31"							
C10	60.00'	20.00'	10.14'	20.00'	N15°04'31"E	19°11'17"	C20	170.00'	88.01'	45.35'	88.00'	N14°33'31"E	30°00'00"	C30	60.00'	94.66'	60.63'	52.22'	N31°55'23"W	62°37'32"							

CURVE TABLE						
CURVE	RADIUS	LENGTH	TANGENT	CHORD	BEARING	DELTA
C38	60.00'	94.66'	60.63'	52.22'	N37°02'27"E	62°37'32"
C39	60.00'	34.14'	17.53'	33.67'	N60°08'08"E	33°00'53"
C40	60.00'	78.69'	46.46'	73.09'	N52°11'36"E	74°34'06"
C41	60.00'	33.17'	11.73'	33.03'	N40°08'28"W	31°39'46"
C42	60.00'	69.00'	32.78'	57.53'	N36°58'02"E	67°17'46"
C43	60.00'	9.93'	4.97'	9.93'	N03°58'16"E	9°28'30"
C44	30.00'	47.12'	30.00'	42.43'	N44°33'31"E	90°00'00"

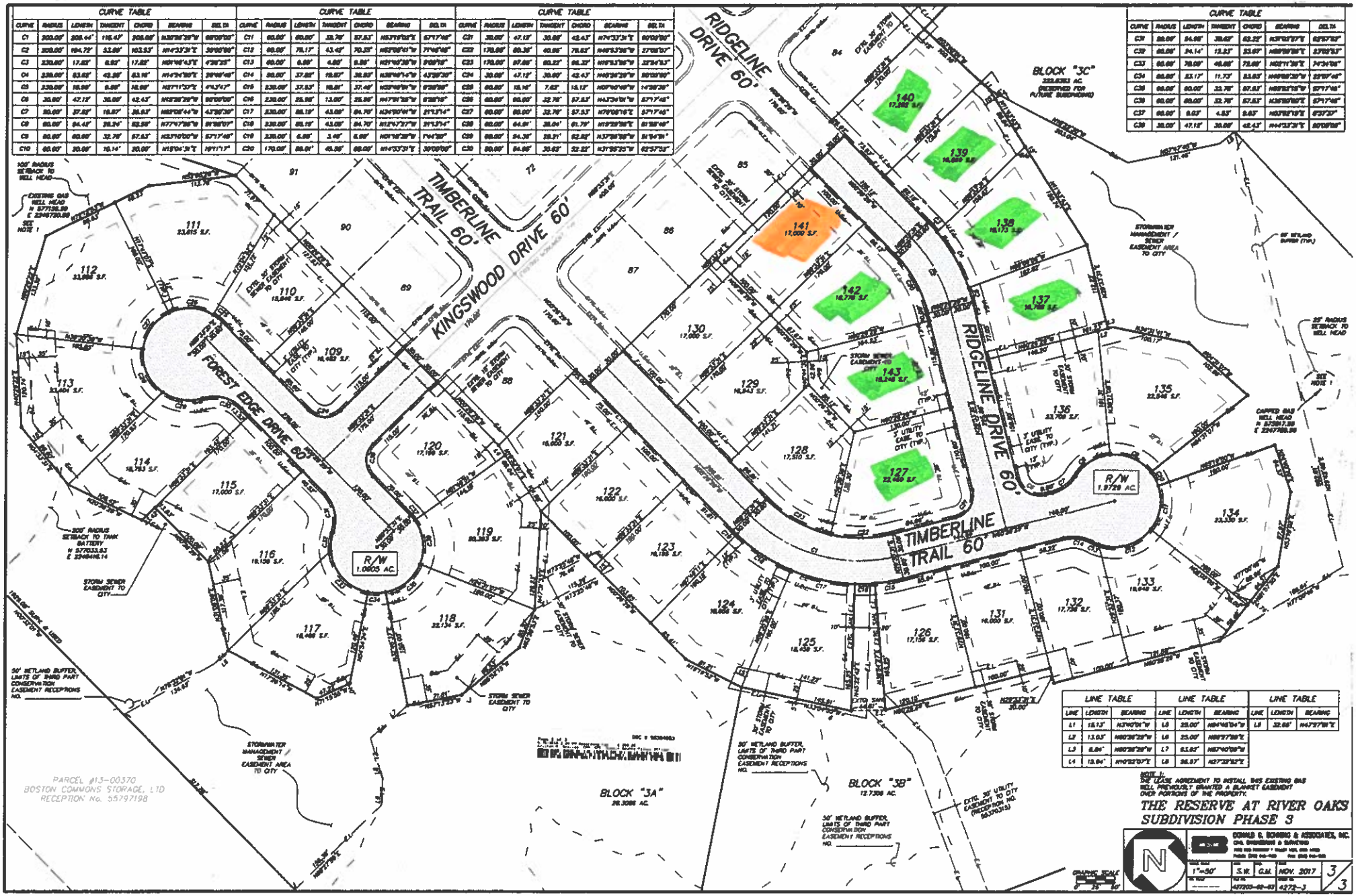

LINE TABLE								
LINE	LENGTH	BEARING	LINE	LENGTH	BEARING	LINE	LENGTH	BEARING
L1	15.13'	N37°40'01"W	L5	25.00'	N89°45'04"W	L9	32.66'	N44°27'38"E
L2	13.03'	N60°36'28"W	L6	25.00'	N89°27'08"E			
L3	6.84'	N60°36'28"W	L7	63.83'	N87°40'08"W			
L4	13.94'	N40°22'07"E	L8	36.57'	N37°33'52"E			

NOTE 1:
THE LEASE AGREEMENT TO INSTALL THIS EXISTING GAS WELL PREVIOUSLY GRANTED A BLANKET EASEMENT OVER PORTIONS OF THE PROPERTY.

THE RESERVE AT RIVER OAKS SUBDIVISION PHASE 3

DONALD G. BOWING & ASSOCIATES, INC.
CIVIL ENGINEERING & SURVEYING

1"=50'	S.W.	G.M.	NOV. 2017	3/3
427203-00-03	4272-3			

Lot 137- vacant

Lot 138- vacant

Lot 134- Vacant

Lot 140- vacant

Lot 142

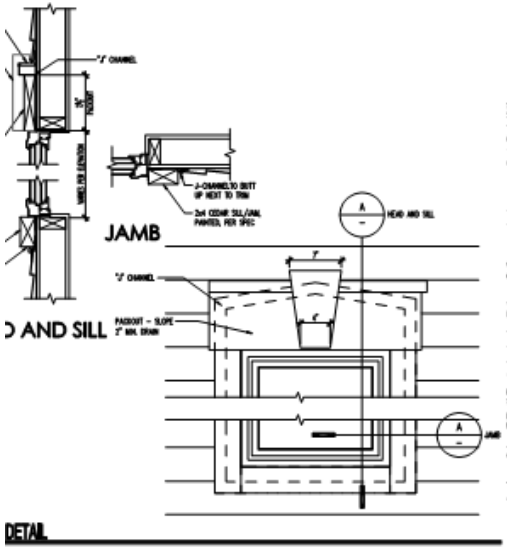

OHIO
HUDSON
COMMUNITY DEVELOPMENT
DEPARTMENT

☑ Approved

12/13/18

Zoning Certificate #:
5395

Cleveland Division
387 Medina Rd. Suite 17
Medina, OH 4425

Pulte

Elevation - 1
Front and Rear Elevations

SINGLE FAMILY
RIVER OAKS
LOT 142
GARAGE LEFT
TBD
HOLBROOK
TBD
PLAN 3140
7.01a1

Lot 143

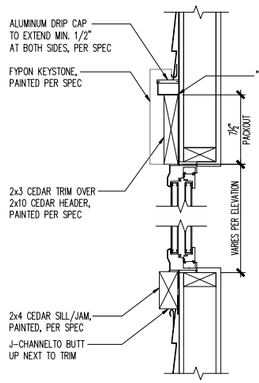

HEAD AND SILL

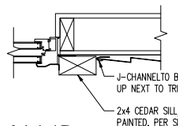

JAMB

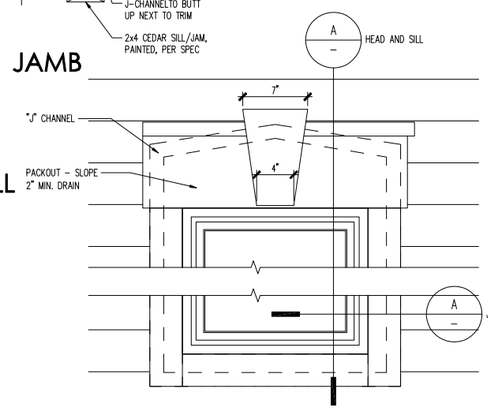

A WNDW TRIM DETAIL
SCALE: 1 1/2"=1'-0"

REAR ELEVATION
SCALE 1/4" = 1'-0"

FRONT ELEVATION
SCALE 1/4" = 1'-0"

OHIO
HUDSON
COMMUNITY DEVELOPMENT DEPARTMENT

☑ Approved

4/25/19

Zoning Certificate #: 19-197

(c) Copyright PulteGroup, Inc. - 2013

Cleveland Division
387 Medina Rd. Suite 1700
Medina, OH 44256

Pulte Homes

Elevation - #5
Front and Rear Elevations

NOTE: SCALES NOTED ON DRAWINGS RELATE TO FULL SIZE PLOTS ON 22x34 SHEETS - 11x17 SHEETS REPRESENT 1/2 SCALE PLOTS

PRODUCTION MANAGER
Jamey Heinzman
CURRENT RELEASE DATE: 03/29/2019

REV #	DATE / DESCRIPTION
△	
△	
△	
△	
△	
△	
△	
△	

ENGINEER OF RECORD: MULHERN & KULP ENGINEERS
ARCHITECT OF RECORD: GODUCO DESIGN - ARCHITECTS

PROJECT TYPE
SINGLE FAMILY

COMMUNITY NAME
RIVER OAKS
LOT 143

LAWSON COMMUNITY ID

GARAGE HANDING
GARAGE RIGHT

SPECIFICATION LEVEL
TBD

PLAN NAME
ATWATER

NPC PLAN NUMBER
1642

LAWSON PLAN ID

LEGACY PLAN NUMBER / NAME
PLAN 3295

SHEET
7.05a1

PLOTTED: March 29, 2019 / Annie Lee / PLAN-3295-RO-ELO1.DWG

Lot 127

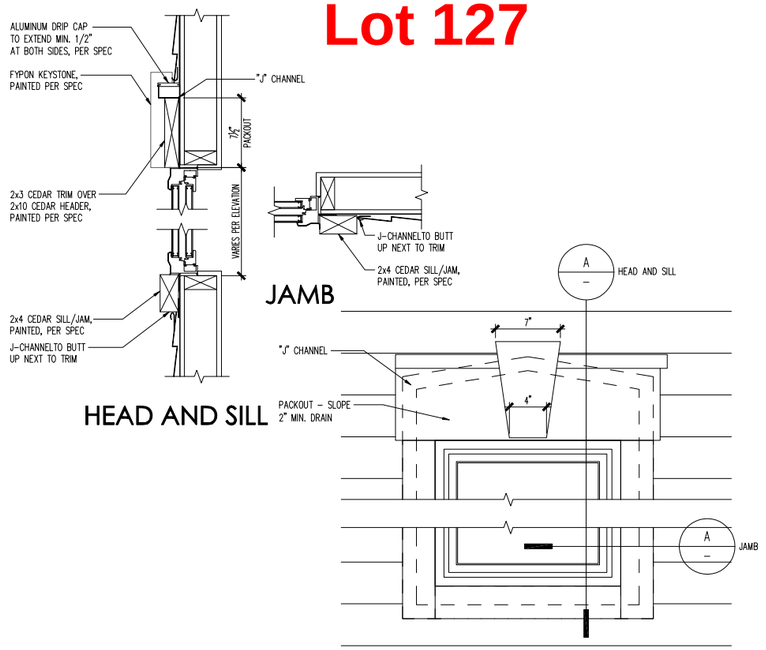

A WNDW TRIM DETAIL

SCALE: 1 1/2"=1'-0"

REAR ELEVATION

SCALE 1/4" = 1'-0"

FRONT ELEVATION

SCALE 1/4" = 1'-0"

OHIO HUDSON COMMUNITY DEVELOPMENT DEPARTMENT

☑ **Approved**

10/16/18

Zoning Certificate #: 4959

PLOTTED: September 13, 2018 / Prem Kumar / PLAN-3295-RO-ELO1.DWG

(c) Copyright PulteGroup, Inc. - 2013

Cleveland Division
387 Medina Rd. Suite 1700
Medina, OH 44256

Pulte Homes

NOTE: SCALES NOTED ON DRAWINGS RELATE TO FULL SIZE PLOTS ON 22x34 SHEETS - 11x17 SHEETS REPRESENT 1/2 SCALE PLOTS

Elevation - #1
Front and Rear Elevations

PRODUCTION MANAGER
Jamey Heinzman
CURRENT RELEASE DATE: 08/29/2018

REV #	DATE / DESCRIPTION
△	
△	
△	
△	
△	
△	
△	

ENGINEER OF RECORD: MULHERN & KULP ENGINEERS
ARCHITECT OF RECORD: GODUCO DESIGN - ARCHITECTS

PROJECT TYPE: SINGLE FAMILY
COMMUNITY NAME: RIVER OAKS LOT 127
LAWSON COMMUNITY ID: ---
GARAGE HANDING: GARAGE RIGHT
SPECIFICATION LEVEL: TBD
PLAN NAME: ATWATER
NPC PLAN NUMBER: 1642
LAWSON PLAN ID: ---
LEGACY PLAN NUMBER / NAME: PLAN 3295
SHEET: 7.01a1