OHIO
HUDSON

COMMUNITY DEVELOPMENT ● 115 Executive Parkway, Suite 400 ● Hudson, Ohio 44236 ● (330) 342-1790

DATE:	January 3, 2018
TO:	City of Hudson Planning Commission Meeting Date of January 10, 2018
FROM:	Kris McMaster, City Planner Greg Hannan, Community Development Director
SUBJECT:	Preliminary Subdivision Plan Re-Approval for the single-family residential Open Space Conservation Subdivision and Final Plat and Site Improvement Plans for Reserve at River Oaks Phase III
ZONING:	District 3: Outer Village Residential Neighborhood
PC Case No:	2018-2628

Project Introduction

Pulte Homes of Ohio, LLC and Prestige and Premier Companies have applied for the following requests:

1. Preliminary Subdivision Plan Re-Approval for the single-family residential Open Space Conservation Subdivision known as the Reserve at River Oaks, Phases 1-5
2. Final Plat and Improvement Plans for The Reserve at River Oaks Phase III for 35 sublots lots. The Final Plat and Improvement Plans approval for Phase I were approved on April 14, 2014 and the Final Plat and Improvement Plans approval for Phase II were approved on May 11, 2015.

The following information is attached to this report.

1. Preliminary Plan submittal for the Re-approval dated December 8, 2017.
2. Final Plat and applicable sheets from Site Improvement Plans received December 11, 2017 from Donald G. Bohning & Associates, Inc.
3. Traffic Impact study, prepared by TMS Engineers, Inc, dated December 28, 2017.
4. Pre-application letter prepared by Community Development Director, Greg Hannan, dated November 21, 2017.
5. Engineering Department review comments, prepared by Assistant City Engineer, Brad Kosco dated January 4, 2018.
6. Draft Final Subdivision Improvement Agreement.

A summary of the applicable Planning Commission cases for the Reserve at River Oaks subdivision since the project was resumed in 2013 is listed below:

Case#	Meeting Date	Action
2013-19	September 9, 2013	Preliminary Plan approval for 144 unit, 353 acres
2013-24	December 9, 2013	Site plan approval for tree clearing activities
2013-23	March 10, 2014	Map amendment (request not approved)
2014-01	March 10, 2014	Compatibility review for subject parcel
2014-05	April 14, 2014	Final Plat and Plans for Phase I - 47 sublots
2014-14	August 11, 2014	Map amendment (request approved 10/1/14)
2015-01	January 26, 2015	Preliminary Plan approval for an additional 88 sublots for a total subdivision of 236 sublots.
2015-02	January 26, 2015	Site Plan approval from tree clearing activities
2015-10	May 11, 2015	Final Plat and plans for Phase II (recorded September 11, 2015)
2016-17	July 7, 2016	Grading approval for future phases

Adjacent Development:
Across Boston Mills Road to the north is commercial office development within District 6. Hudson Crossing commercial/industrial development within District 6 is immediately south of the subject parcel. The Village of Boston Heights abuts most of the western boundary of the subdivision. The abutting village zoning is large lot residential along Boston Mills Road, general business abutting the central portion of the development, and light industrial abutting the southern portion.

Preliminary Plan

As part of the application for Phase III Final Plat, the applicant must seek to renew the preliminary plan approval as more than a year has passed since the recording of the Phase II final plat. Staff notes the proposed subdivision boundary, number of sublots, pedestrian connections, and clearing limits have not changed since the previous plan approval. Additionally, not amendments have been made to the LDC which would impact the proposed development.

Phase III Final Plat and Improvement Plans

Chapter 1205 – District Regulations

Lot Dimensional and Setback Standards: The proposed sublots are in compliance with applicable lot dimensional and setback standards. Staff notes orientation of the principal structure shall be parallel to the street or perpendicular to a radius of the curve of the street extended through the

approximate center of the main mass, if street is curved. Sublot 135 shall be reviewed for final approval of placement of house.

Section 1207 Zoning Development and Site Plan Standards

Tree and Vegetation Protection: The limits of disturbance have been delineated on the plans. As discussed in the preliminary plan, the applicant has proposed to complete the mass grading of the individual sublots as part of the base improvements. Tree clearing within the limits of disturbance was previously approved for this area per PC 2015-02 and has been completed.

Wetland/Stream Corridor Protection: The subject parcel contains significant wetland areas as well as a 100 foot width riparian corridor located within the interior of the wetland areas. No disturbances are proposed to the existing wetland, riparian corridors, or their setbacks.

As part of the Preliminary Plan review (2015-01) the applicant submitted documentation related to U.S. Army Corp of Engineers (ACOE) permit 98-5120009 and 2001-01833, issued to Duke Realty for wetland and stream disturbances within the subject property and Hudson Crossing Industrial Park to the south. The associated stream and wetland disturbances authorized under the ACOE permits were completed between 2003 and 2005. The submitted documentation indicates the applicant completed the applicable disturbances and mitigation work within the requirements of the ACOE.

The applicant has submitted comments regarding the Water Resources Evaluation-River Oaks Subdivision, Phase 3, 4, and 5, Boston Mills Road, Hudson, Summit County, Ohio from Davey Resource Group dated indicating that "the project site consists of previously disturbed upland areas that were cleared and rough graded several years ago during initial construction of the residential subdivision. The project was authorized by the U.S. Army Corps of Engineers under Section 404 of the Clean Water Act (Department of Army Np. 2000-02403). No regulated aquatic resources are present within the footprint of Phases 3, 4, and 5 of the River oaks site".

Landscaping/Buffering:

Adjacent use	Bufferyard required	Minimum Distance
West – single family residential land use at 800 Boston Mills Road	C	15 ft (Moderate)
West - Office/Commercial at 780 Boston Mills Rd	D	25 ft (Substantial)
South - WBC Development at Hudson Crossing	E	40 feet (Major)
East - Reserve at River Oaks adjacent phases	N/A	

Due to the required 100 foot perimeter setback for an Open Space Conservation Subdivision (OSCS) and the existing vegetation, preservation of existing vegetation will satisfy the

requirements in most areas. The proposed retention basin west of sublot 117 will require the installation of bufferyard plantings.

Open Space: The subdivision will include an eight foot wide pedestrian path connecting the north and south portions of the subdivision within the eastern phases. Additionally, 70% (311 acres) of the subdivision is dedicated as a conservation easement. This significant dedication along with the multi-purpose trail extension was previously determined to meet the public open space requirements.

Sidewalk and Pathway Requirements: Sidewalks have been appropriately depicted on both sides of the interior streets. A multi-purpose path has been required through the eastern phases of the development and along the Boston Mills Road frontage.

Traffic Impact: A traffic impact study was completed as part of the previous preliminary plan approval. At the request of the City Engineer, a traffic impact study was recently completed by TMS Engineers, Inc to compare the existing trip generation from the current site with the forecasts made in the 2013 Study. The consultant states that no additional improvements are needed along Boston Mills Road to accommodate the actual trip generation. The study is currently under review by the Engineering Department.

Special Development Standards: The development contains an existing gas well installation adjacent to sublot 112, 134 and 135 and a tank battery adjacent to sublot 112. The applicant has noted the applicable setbacks on the improvement plans.

Engineering Comments: Assistant City Engineer, Bradley Kosco has completed his review of the improvement plans and plat per his letter dated January 4, 2018.

Fire Department Comments: Fire inspector Shawn Kasson has completed a review and is satisfied with the submitted plans.

Chapter 1208 – Subdivision Design and Improvement/Dedication Standards

Improvement guarantees: The subdivider and the city shall execute a Final Subdivision Improvement Agreement setting forth what improvements are to be installed and when. A performance bond or other financial guarantee shall be posted by the applicant for the purpose of assuring the installation of such improvements at or before a time the agreement is executed.

Preliminary Subdivision Plan Re-Approval for the single-family residential Open Space Conservation Subdivision known as the Reserve at River Oaks, Phases 1-5

Findings: Section 1204.05(b) Preliminary Subdivision Plan
Staff finds that the application complies with applicable sections of the Land Development Code, except as discussed above and recommended below.

Required PC Action, Chapter 1203.10(d)(1)(B)
The PC shall take final action on the Preliminary Plan application by reviewing the application and all submitted plans and reports, and then either approving, approving with conditions, or denying the application based on its compliance with the standards summarized in this report.

All decisions of the Commission shall be based on written findings of fact related to the relevant standards of the Code.

Recommendation
Approve the application for Case No. 2018-2628 for Preliminary Subdivision Plan Re-Approval for the single-family residential Open Space Conservation Subdivision known as the Reserve at River Oaks, Phases 1-5 according to plans dated as received December 8, 2017.

Final Plat and Improvement Plans for The Reserve at River Oaks Phase III for 35 sublots lots

Findings: Section 1204.05(c) Final Subdivision Plat
Staff finds that the application complies with applicable sections of the Land Development Code, except as discussed above and recommended below. The subdivider has committed to execute a Final Subdivision Improvement Agreement and post the required bonds pursuant to Section 1208.15(a).

Required PC Action, Chapter 1203.10(d)(1)(B)
The PC shall take final action on the Final Plat application by reviewing the application and all submitted plans and reports, and then either approving, approving with conditions, or denying the application based on its compliance with the standards summarized in this report.

All decisions of the Commission shall be based on written findings of fact related to the relevant standards of the Code.

Recommendation

Approve the application for Case No. 2018-2628 for Final Plat and Improvement Plans for The Reserve at River Oaks Phase III according to plans dated as received December 8, 2017 with the condition that the applicant must address the following:

1. The Final Subdivision Improvement Agreement must be accepted and signed by the City and Developer.
2. Improvements plans and the Traffic Impact study are subject to the review and acceptance of the City Engineer.
3. Submit a landscape plan depicting applicable bufferyard adjacent to sublots 113-117.
4. A performance bond or other financial guarantee shall be posted by the applicant for the purpose of assuring the installation of improvements at or before a time the Final Subdivision Improvement Agreement is executed.
5. No clearing or grading of any kind shall commence prior to the issuance of a zoning certificate.

OPEN SPACE CONSERVATION SUBDIVISION (REVISED 9/16)

	GROSS LAND AREA TO EXTG. R/W	WETLAND & FLOODPLAIN AREA	PROPOSED R/W	NET LAND AREA	SUBLOTS: ALLOWABLE DENSITY	SUBLOTS: PROPOSED	AREA OF PROPOSED SUBLOTS	OPEN SPACE REQUIRED 50% GROSS LAND	OPEN SPACE PROVIDED
DISTRICT 2	193.36 AC.	131.23 AC.	7.94 AC.	54.19 AC.	1 DWELLING UNIT PER 2.5 ACRES 54.19 / 2.5= 21	40	30.67 AC.	193.36 X 0.5 = 96.68 AC.	A, B, C - 154.75 AC. (80.0%)
DISTRICT 3	249.94 AC.	86.78 AC.	19.70 AC.	143.46 AC.	2.5 DWELLING UNITS PER ACRE 143.46 X 2.5= 358	195	74.89 AC.	249.94 X 0.5 = 124.97 AC.	D, E, F, G, H, I - 155.35 AC. (62.2 %)
OVERALL DEVELOPMENT	443.30 AC.	218.01 AC.	27.64 AC.	197.65 AC.	COMBINED DENSITY: 379	235	105.56 AC.	221.65 AC.	310.10AC. (70.0%)

LANDSCAPE/BUFFERING

ADJACENT USE	BUFFERYARD REQUIRED	MINIMUM DISTANCE
OAK POINT COMMONS, HUDSON WEST CONDOMINIUMS, AND ANY OTHER RESIDENTIAL DEVELOPMENT	C	15 FT (Minor)
LAUREL LAKE, THE ELMS RETIREMENT FACILITY	D	25 FEET (Substantial)
WBC DEVELOPMENT AT HUDSON CROSSING	E	40 FEET (Major)

PHASING:

NO.	SUBLOTS	SCHEDULED YEAR OF DEVELOPMENT
1	1 - 47	2015
2	48 - 108	2016
3	109 - 143	2018
4	144 - 195	2019
5	196 - 235	2019

LEGEND

ITEM: EXISTING	ITEM: PROPOSED	DESCRIPTION
	R/W	RIGHT-OF-WAY
C/L	C/L	CENTERLINE OF R/W
+ 944		SPOT ELEVATION
944	944	CONTOUR LINE
	25' REAR; 10' SIDE; 48; 10' SIDE; 40' FRONT; 27' WIDE (B. TO B.) PAVEMENT	BUILDING SETBACKS / BLDG. ZONE (NOTE 25' SIDE YARD SETBACK ON CORNER LOTS - TYP.); BLDG. NO. DESIGNATION; GENERIC HOUSE & 3 CAR SIDE LOAD GARGAE BOX, SEE NOTE 4; SIDEWALK TO FRONT DOOR; PROPERTY LINE; RIGHT-OF-WAY
SAN	SAN	SANITARY SEWER & MANHOLE
ST	ST	YARD BASIN, STORM SEWER & MANHOLE
		CURB INLET BASIN
		WETLANDS

NOTE:

1. WATER MAIN PROPOSED ON STORM SEWER SIDE OF STREET W/ HYDRANTS AT 300' SPACING.
2. 8" WATER MAIN TO BE CONNECTED THRU SUBDIVISION TO WEST POINT DRIVE & SOUTHERLY TO S.R. 303.
3. MAXIMUM IMPERVIOUS SURFACE COVERAGE SHALL NOT EXCEED 60% OF THE GROSS AREA FOR EACH LOT.
4. THE GENERIC HOUSE BOX AND SIDE LOAD GARAGE DRIVE PAD SHOWN ARE FOR REFERENCE PURPOSES ONLY TO HELP BETTER DEPICT THE PROPOSED IMPROVEMENTS AND ARE NOT MEANT TO REPRESENT THE FOOTPRINT OF THE HOUSES THAT WILL ULTIMATELY BE BUILT.
5. MAINTAIN 50' NATURAL BUFFER ABUTTING WEST POINT DRIVE RESIDENTS & ADD ADDITIONAL PLANTINGS AS REQUIRED.

THE RESERVE AT RIVER OAKS EXPANDED PRELIMINARY PLAN RE-APPROVAL

BOSTON MILLS ROAD / WEST STREETSBORO ROAD
CITY OF HUDSON
SUMMIT COUNTY, OHIO

Developer:
PRESTIGE & PREMIER COMPANIES
17 W. STREETSBORO ST.
HUDSON, OHIO, 44236
PHONE (330) 650-2033

Prepared By:
DONALD G. BOHNING & ASSOCIATES, INC.
7979 HUB PARKWAY
VALLEY VIEW, OHIO, 44125
PHONE (216) 642-1130

OR. NO. 4272-P2 DATE: NOV. 21, 2014
REVISED: JAN. 6, 2015
REVISED: SEPT. 22, 2015
RE-APPROVAL: DEC. 11, 2017

M:\adcadd\p\4272-P2\dwg\Prelim Plan Submitted With Ph3.dwg 12/4/2017 3:47 PM

NOTE:
THIS "RE-APPROVAL" IS A TIME PERIOD RE-APPROVAL ONLY OF THE DEVELOPMENT PLAN FOR THE RESERVE AT RIVER OAKS WHICH HAS RECEIVED EARLIER OVERALL APPROVAL.

GRAPHIC SCALE: 0' 300' 600'

VILLAGE OF BOSTON HEIGHTS
CITY OF HUDSON

*MAINTAIN 30' NATURAL BUFFER
OR 15' W/ ADDITIONAL PLANTINGS

100' BUFFER (TYP.)

WETLANDS

50' WETLAND BUFFER (TYP.)

FOREST EDGE DRIVE 60'

TIMBERLINE TRAIL 60'

HIGHWOOD CT. 60'

WOODVIEW CT. 60'

KINGSWOOD DR (60')

RIDGELINE DRIVE 60'

BIRCH CT (60')

WILDWOOD COURT 60'

REGAL WOODS DRIVE (60')

ROSEWOOD TR (60')

MAJESTIC OAKS DRIVE 60'

OPEN SPACE "D"

OPEN SPACE "E"

OPEN SPACE "F" (1.97 AC.)

PHASE 1 (CONSTRUCTED)

PHASE 2 (CONSTRUCTED)

PHASE 3

PHASE 4

PROP. 22' (B. TO B.) PVMT. (TYP.)

BOSTON MILLS ROAD (C.H. 32) 60'

8' MULTIPURPOSE TRAIL

R/W

GRAPHIC SCALE:

0' 100' 200'

N

2/5

W:\dwg\2017-2021\dwg\Fremin Plan Submitted With PN.dwg 12/4/2017 3:28 PM

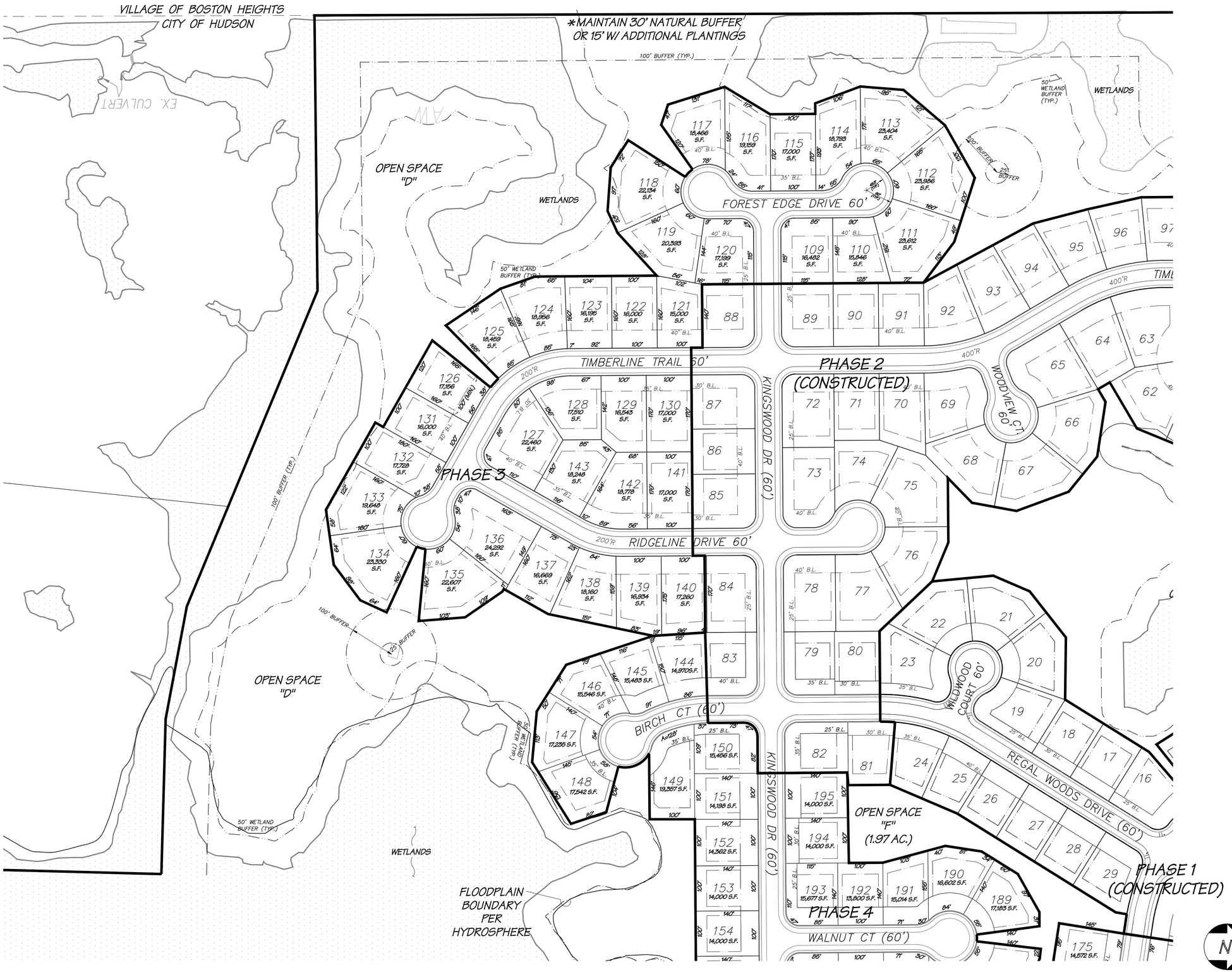
VILLAGE OF BOSTON HEIGHTS
CITY OF HUDSON
EX. CULVERT
*MAINTAIN 30' NATURAL BUFFER OR 15' W/ ADDITIONAL PLANTINGS
100' BUFFER (TYP.)
OPEN SPACE "D"
WETLANDS
50' WETLAND BUFFER (TYP.)
FOREST EDGE DRIVE 60'
TIMBERLINE TRAIL 60'
RIDGELINE DRIVE 60'
KINGSWOOD DR (60')
WOODVIEW CT 60'
WILDWOOD COURT 60'
REGAL WOODS DRIVE (60')
BIRCH CT (60')
WALNUT CT (60')
PHASE 2 (CONSTRUCTED)
PHASE 3
PHASE 4
PHASE 1 (CONSTRUCTED)
OPEN SPACE "E" (1.97 AC.)
FLOODPLAIN BOUNDARY PER HYDROSPHERE
GRAPHIC SCALE:
0' 100' 200'
N
3/5

PHASE 3

PHASE 2 (CONSTRUCTED)

PHASE 1 (CONSTRUCTED)

PHASE 4

RIDGELINE DRIVE 60' (200'R)

BIRCH CT (60')

KINGSWOOD DR (60')

WILDWOOD COURT 60'

REGAL WOODS DRIVE (60')

ROSEWOOD TR (60')

WALNUT CT (60')

TIMBERLINE TRAIL 60' (500'R, 300'R)

MAJESTIC OAKS DRIVE 60'

BOSTON MILLS ROAD (C.H. 32) 60'

EXECUTIVE PARKWAY (60)

OPEN SPACE "E"

OPEN SPACE "F" (1.97 AC.)

OPEN SPACE "D"

FLOODPLAIN BOUNDARY PER HYDROSPHERE

50' WETLAND BUFFER (TYP.)

50' WETLAND BUFFER (SETBACK)

100' BUFFER (TYP.)

100' BUFFER

25' BUFFER

8' MULTIPURPOSE TRAIL

GRAPHIC SCALE: 0' 100' 200'

4/5

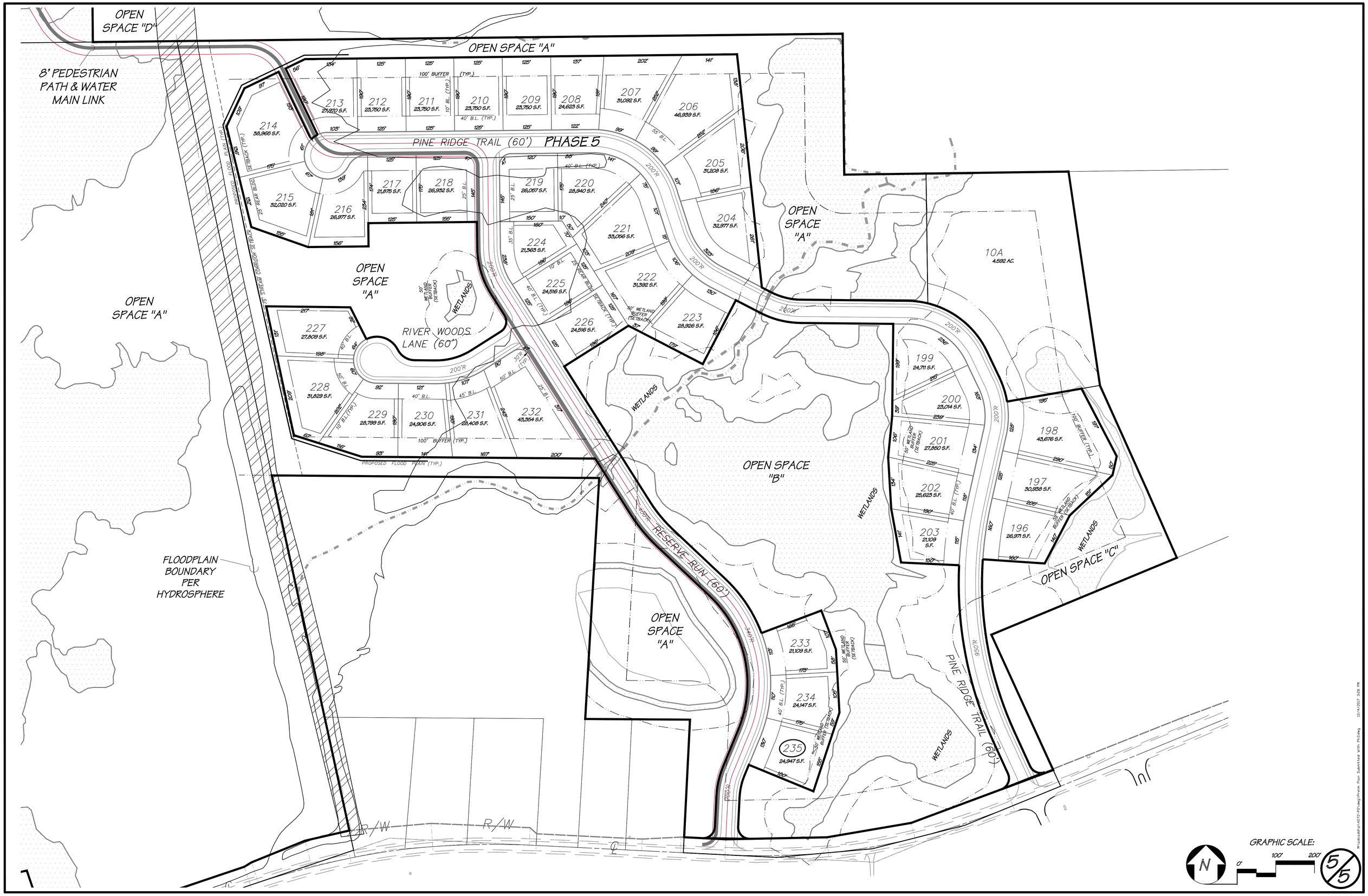
OPEN SPACE "D"
OPEN SPACE "A"
8' PEDESTRIAN PATH & WATER MAIN LINK
100' BUFFER (TYP.)
PINE RIDGE TRAIL (60') PHASE 5
PROPOSED FLOOD PLAIN (TYP.)
75' STREAM CORRIDOR SETBACK
OPEN SPACE "A"
OPEN SPACE "A"
WETLANDS
RIVER WOODS LANE (60')
OPEN SPACE "A"
10A
4.592 AC.
WETLANDS
OPEN SPACE "B"
WETLANDS
OPEN SPACE "C"
FLOODPLAIN BOUNDARY PER HYDROSPHERE
RESERVE RUN (60')
OPEN SPACE "A"
PINE RIDGE TRAIL (60')
WETLANDS
R/W
R/W
GRAPHIC SCALE:
0'
100'
200'
N
5/5

THE RESERVE AT RIVER OAKS
SUBDIVISION ~ PHASE 3
IMPROVEMENT PLANS
CITY OF HUDSON ~ SUMMIT COUNTY ~ STATE OF OHIO
(SUBLOTS 109 thru 143)
D.S.S.S. PROJECT NO. _____

NEORSD - SOUTHERLY W.W.T.P. VIA CVI

NOVEMBER 2017

BENCH MARK # 1
TOP OF HYDRANT
STA. 35+84 BOSTON MILLS ROAD
ELEV. 1001.06

BENCH MARK # 2
TOP OF HYDRANT
STA. 31+04 BOSTON MILLS ROAD
ELEV. 995.03

* ELEVATIONS SHOWN ARE NAVD (88) VERTICAL DATUM, AS OBSERVED USING SUMMIT COUNTY MONUMENT HU118.

- ZONING DISTRICT 3 (OPEN SPACE CONSERVATION)
- TYPICAL SETBACKS (SEE PLAT FOR EACH LOT SETBACK)
  - SIDE 10'
  - FRONT 40'
  - REAR 25'
- DENSITY FOR OVERALL SUBDIVISION PER PRELIMINARY PLAN APPROVED JANUARY 2015
  - ALLOWABLE: 381 UNITS
  - PROPOSED: 236 UNITS
- SEE RECORD PLAT FOR EACH PHASE FOR OPEN SPACE PROVIDED

IMPERVIOUS AREA NOTES:

1. PER CITY OF HUDSON LAND DEVELOPMENT CODE SECTION 1207.01 THE MAXIMUM IMPERVIOUS SURFACE PER LOT IN AN OPEN SPACE CONSERVATION SUBDIVISION IS 60% OF THE TOTAL GROSS AREA OF THE UNDERLYING LOT OR LOTS. I.E. A 14,000 S.F. LOT ALLOWS 8,400 S.F. IMPERVIOUS AREA.
2. TOTAL PHASE 1, PHASE 2, & PHASE 3 SUBLOT AREA IS APPROXIMATELY 56.43 ACRES AND TOTAL OPEN SPACE AREA IS APPROXIMATELY 70.6 ACRES. TOTAL SITE AREA EXCLUSIVE OF RIGHT-OF-WAY = 127.1 ACRES. TOTAL IMPERVIOUS AREA ALLOWED IS 33.9 ACRES (56.43x0.6). THE PERCENTAGE OF IMPERVIOUS AREA ALLOWED IS 26.7% (33.9/127.1).

INDEX OF SHEETS

1	TITLE SHEET
2	KEY MAP
3	EXISTING CONDITIONS
4	GENERAL NOTES
5	CITY OF HUDSON AND D.S.S.S. NOTES
6–19	IMPROVEMENT PLAN & PROFILES
20	INTERSECTION DETAILS
21–22	POND PLANS & DETAILS
23–28	DETAILS
29–30	GRADING PLAN
31–32	EARTHWORK PLAN
33–34	STORM WATER POLLUTION PREVENTION PLAN
35–36	S.W.P.P.P. NOTES, DETAILS & LEGEND

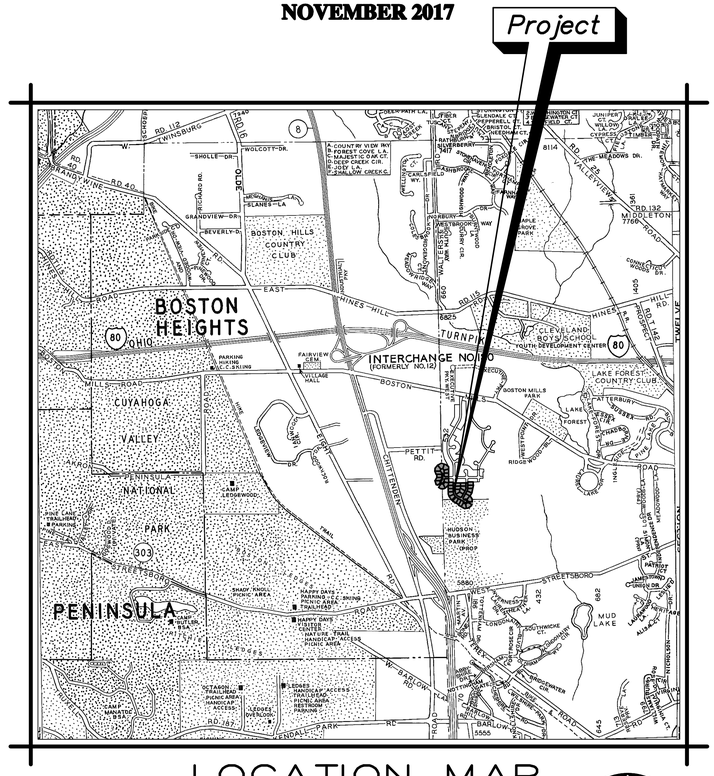

LOCATION MAP
NOT TO SCALE

N

2 WORKING DAYS
BEFORE YOU DIG
CALL TOLL FREE (800) 362-2764
OHIO UTILITIES PROTECTION SERVICE
OGPUPS CALL (614)-715-2984
OHIO OIL & GAS PRODUCERS
UNDERGROUND PROTECTION SERVICE

NOTE:
1.) THE DEVELOPER SHALL BE RESPONSIBLE FOR ALL COSTS OF RECORDING NECESSARY DOCUMENTS ASSOCIATED WITH THIS PROJECT.
2.) ANY USE WITHIN A CHANNEL/SWALE EASEMENT THAT WOULD IMPAIR THE PROPER FUNCTIONING OF THE DRAINAGE FACILITY IS PROHIBITED.

CONVENTIONAL SIGNS:

ITEM	EXISTING	PROPOSED	RECONST'D
RIGHT OF WAY			
CENTERLINE			
PROPERTY LINE			
EASEMENT LINE	E.L.	E.L.	
GAS MAIN	G		
GAS CONNECTION	G.C.		
WATER MAIN	W	W	
HYDRANT & VALVE	F	F	F
WATER CONNECTION	W.C.	W.C.	
WATER MAIN VALVE	W	W	
SANITARY SEWER	SAN.	SAN.	
SANITARY CONNECTION	SAN.C.	SAN.C.	
STORM SEWER	ST.	ST.	
STORM CONNECTION	ST.C.	ST.C.	
UNDERGRD. TELE. DUCTS	T	T	
UNDERGRD. ELEC. CABLE	E	E	
UNDERGRD. TV CABLE	CTV	CTV	
FENCE	— x — x — x —	— x — x — x —	
GUARDRAIL			
UTILITY POLE			X – RELOCATED
LIGHT POLE			X – RELOCATED
MONUMENT ASSEMBLY	◇	◇	
MANHOLE	○	●	◪
BASIN	▭	■	◪
SIGN POST		■	
TREE		•	
BUSH, BRUSH			
WELL	+W		
SEPTIC TANK	S		
SWALE			
SPOT ELEVATION	×	×	
CONTOUR ELEVATION	100	100	

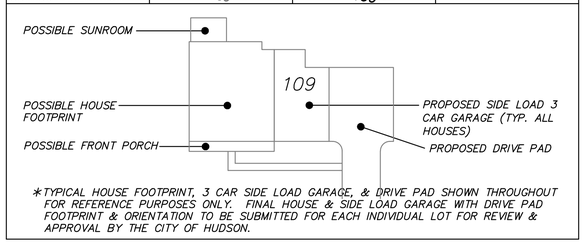

*TYPICAL HOUSE FOOTPRINT, 3 CAR SIDE LOAD GARAGE, & DRIVE PAD SHOWN THROUGHOUT FOR REFERENCE PURPOSES ONLY. FINAL HOUSE & SIDE LOAD GARAGE WITH DRIVE PAD FOOTPRINT & ORIENTATION TO BE SUBMITTED FOR EACH INDIVIDUAL LOT FOR REVIEW & APPROVAL BY THE CITY OF HUDSON.

DATE:
HUDSON CITY ENGINEER – THOMAS J. SHERIDAN, PE, PS

DATE:
ENGINEER OF DESIGN – TRAVIS COYNE

OHIO ENVIRONMENTAL PROTECTION AGENCY
(O.E.P.A.)
(SANITARY SEWER) DATE:
(WATER SYSTEM) DATE:

SEWERAGE SYSTEM APPROVAL

DATE:
DIRECTOR – MICHAEL A. WEANT
DEPARTMENT OF SANITARY SEWER SERVICES

OHIO ENVIRONMENTAL PROTECTION AGENCY
(O.E.P.A.)
N.O.I. APPROVAL DATE:
PERMIT NO.:

REVISIONS

STATE OF OHIO
TRAVIS B. COYNE
E-78050
REGISTERED
PROFESSIONAL ENGINEER

DEVELOPER
PULTE HOMES OF OHIO
387 MEDINA ROAD, SUITE 1700
MEDINA, OH. 44256
ATTN: BRIAN CAVE
PHONE: (440) 670-2876

TITLE SHEET
THE RESERVE AT RIVER OAKS
SUBDIVISION ~ PHASE 3
CITY OF HUDSON ~ OHIO
SUMMIT COUNTY, OHIO

DONALD G. BOHNING & ASSOCIATES, INC.
CIVIL ENGINEERING & SURVEYING
7979 HUB PARKWAY • VALLEY VIEW, OHIO 44125
PHONE: (216) 642-1130 FAX: (216) 642-1132
M:\pdrive\dgb\4272-3\DWG\4272D03 01.dwg 12/4/2017 3:12 PM

GRAPHIC SCALE
HORIZ. SCALE ------
VERT. SCALE ------
DR'N S.W. CKD. T.C.
DATE NOV., 2017
ORDER NO. 4272-3

BENCH MARK # 1
TOP OF HYDRANT
STA. 35+84 BOSTON MILLS ROAD
ELEV. 1001.06

BENCH MARK # 2
TOP OF HYDRANT
STA. 31+04 BOSTON MILLS ROAD
ELEV. 995.03

NOTE:
1. PROPERTY SUBLOT FRONTAGES, SETBACKS AND WIDTHS ARE LOCATED ON PAGE 3 OF THE RECORD PLAT.

LEGEND
SAN. MH. No. XX

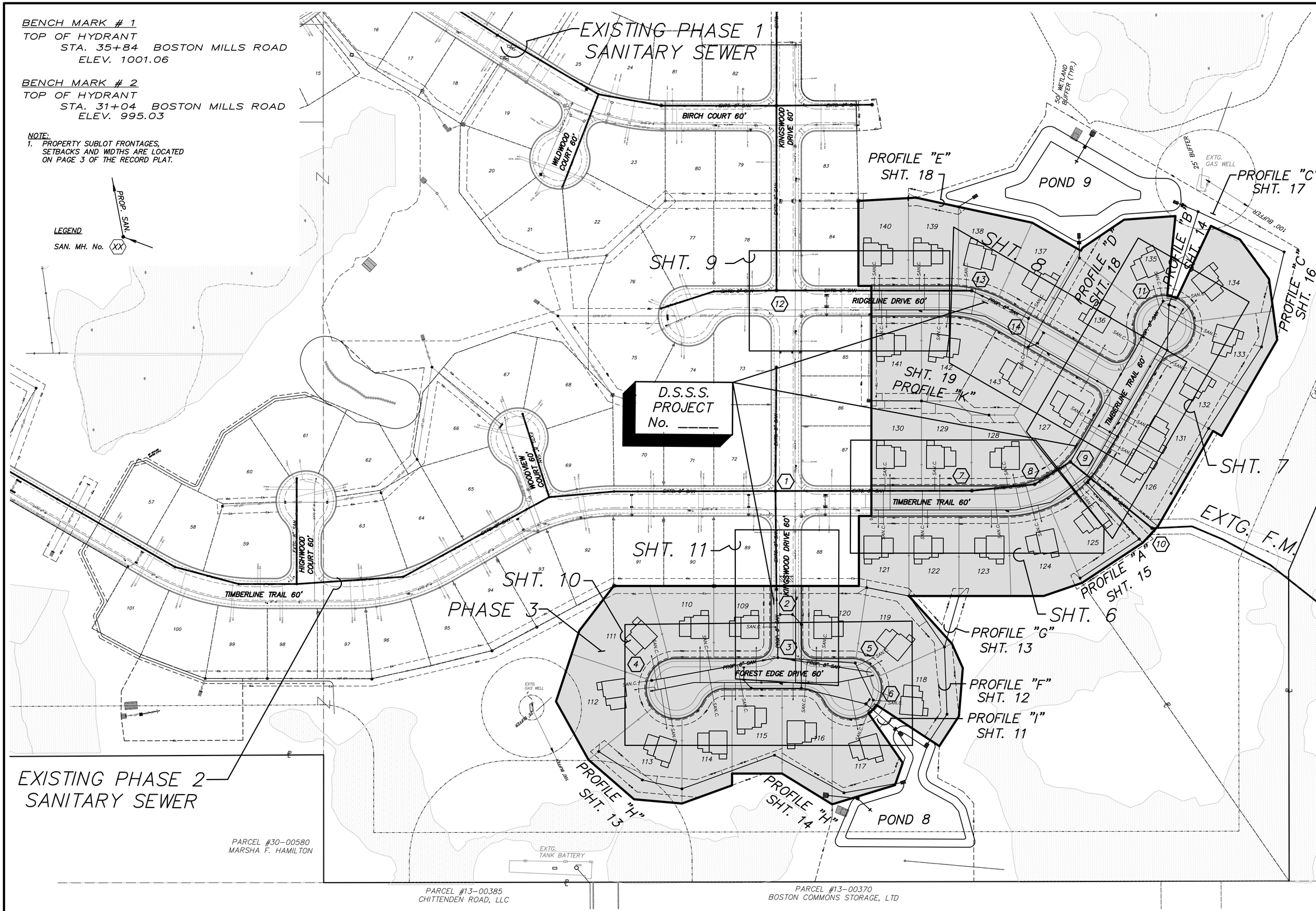

REVISIONS

KEY MAP
THE RESERVE AT RIVER OAKS ~ PHASE 3
CITY OF HUDSON
SUMMIT COUNTY, OHIO

DONALD G. BOHNING & ASSOCIATES, INC.
CIVIL ENGINEERING & SURVEYING
7979 HUB PARKWAY • VALLEY VIEW, OHIO 44125
PHONE: (216) 642-1130 FAX: (216) 642-1132

GRAPHIC SCALE 0' 40' 80'

HORIZ. SCALE	1"=80'
VERT. SCALE	-----
DR'N S.W.	CKD. T.C.
DATE	NOV., 2017
ORDER NO.	4272-3

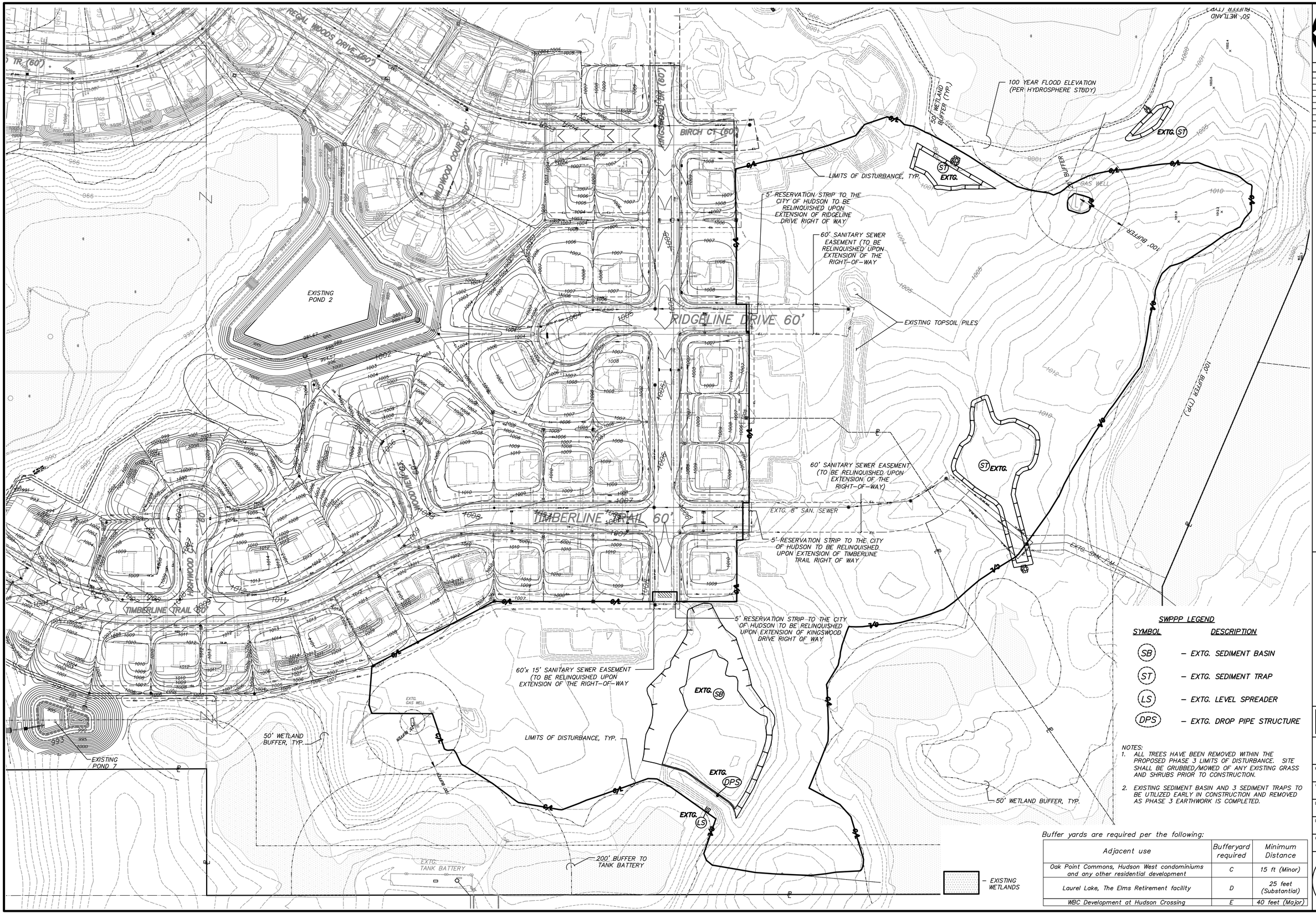

SWPPP LEGEND

SYMBOL	DESCRIPTION
SB	– EXTG. SEDIMENT BASIN
ST	– EXTG. SEDIMENT TRAP
LS	– EXTG. LEVEL SPREADER
DPS	– EXTG. DROP PIPE STRUCTURE

NOTES:
1. ALL TREES HAVE BEEN REMOVED WITHIN THE PROPOSED PHASE 3 LIMITS OF DISTURBANCE. SITE SHALL BE GRUBBED/MOWED OF ANY EXISTING GRASS AND SHRUBS PRIOR TO CONSTRUCTION.
2. EXISTING SEDIMENT BASIN AND 3 SEDIMENT TRAPS TO BE UTILIZED EARLY IN CONSTRUCTION AND REMOVED AS PHASE 3 EARTHWORK IS COMPLETED.

Buffer yards are required per the following:

Adjacent use	Bufferyard required	Minimum Distance
Oak Point Commons, Hudson West condominiums and any other residential development	C	15 ft (Minor)
Laurel Lake, The Elms Retirement facility	D	25 feet (Substantial)
WBC Development at Hudson Crossing	E	40 feet (Major)

REVISIONS

EXISTING CONDITIONS
THE RESERVE AT RIVER OAKS ~ PHASE 3
CITY OF HUDSON
SUMMIT COUNTY, OHIO

DONALD G. BOHNING & ASSOCIATES, INC.
CIVIL ENGINEERING & SURVEYING
7979 HUB PARKWAY * VALLEY VIEW, OHIO 44125
PHONE: (216) 642-1130 FAX: (216) 642-1132
M:\pubdwg\4272-3\DWG\4272D3 03.dwg 12/6/2017 8:01 PM

GRAPHIC SCALE 0' 40' 80'
HORIZ. SCALE 1"=80'
VERT. SCALE ----
DRN. S.W. CKD. T.C.
DATE NOV., 2017
ORDER NO. 4272-3

NOTE: ROOF DRAINS SHALL BE CONSTRUCTED TO TIE INTO 6" STORM CONNECTION AND NOT TO SUMP PUMP OR FOOTER DRAIN.

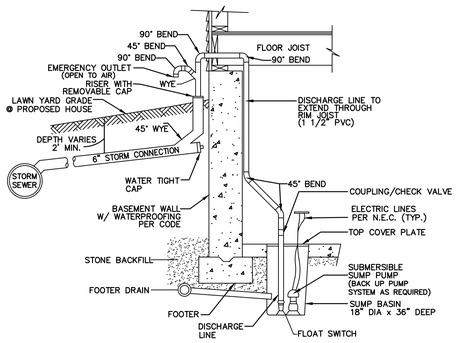

SUMP PUMP CONNECTION DETAIL

NO SCALE

NOTES:

1. DEPRESS SIDEWALK 3" FOR 10' TO PROVIDE EMERGENCY FLOW CORRIDOR TO RETENTION POND
2. ALL STORMWATER MANAGEMENT PONDS SHALL BE OWNED AND MAINTAINED BY THE RESERVE AT RIVER OAKS HOA. THE CITY OF HUDSON SHALL HAVE THE RIGHT TO ACCESS AND MAINTAIN SAID AREAS.
3. NO ENCROACHMENTS ARE PERMITTED INTO THE SWALES / STORM EASEMENTS THAT IMPEDE THE FLOW OF WATER IN THESES AREAS.

NOTE:

GENERAL HOUSE FOOTPRINT & GRADING AS PROPOSED ARE FOR GENERAL DRAINAGE PURPOSES ONLY. EACH HOME SITE PLOT PLAN SHALL ESTABLISH ACTUAL FINAL LOT GRADING AND BUILDING FOOTPRINT WITH FLOOR ELEVATIONS.

ADD 1,000' TO ALL SPOT ELEVATIONS SHOWN.

⊙ – INDICATES PROPOSED "WINDOW" BASEMENT

– DELINEATED WETLANDS TO REMAIN

THESE DRAWINGS DEPICT THE DELINEATED WETLANDS TO REMAIN, AS PROVIDED BY CHAGRIN VALLEY ENGINEERING & PRESTIGE & PREMIER COMPANIES. REFER TO APPROVED U.S. ARMY CORPS PERMIT No. 2001-01833 DATED OCTOBER 26, 2010, AND GRANT OF SECTION 401 WATER QUALITY CERTIFICATION, OHIO EPA ID. No. 010517 DATED SEPTEMBER 16, 2002, FOR DELINEATED WETLANDS PERMITTED TO BE FILLED.

LEGEND

SYMBOL	DESCRIPTION
	RIGHT-OF-WAY
	EDGE OF PAVEMENT
	CENTERLINE
	EDGE OF PAVEMENT
	RIGHT-OF-WAY

EXISTING	PROPOSED	DESCRIPTION
1003	1003	CONTOUR
4	1006.33 77 F.F. 1009.00 G.F. 1007.00	FINISH GRADE @ REAR OF HOUSE (LOWEST ELEV. OF OPENING); SUBLOT No.; APPROX. FIN. FLOOR ELEV.; APPROX. GAR. FLOOR ELEV.; DWELLING
		IN./CATCH BASIN
C.B. 2-2B T.C.XXXX.XX	C.B. 2-2B T.C.XXXX.XX	CATCH BASIN 2-2B & 2-3
	+44.01	FINISH GRADE ELEVATION

REVISIONS

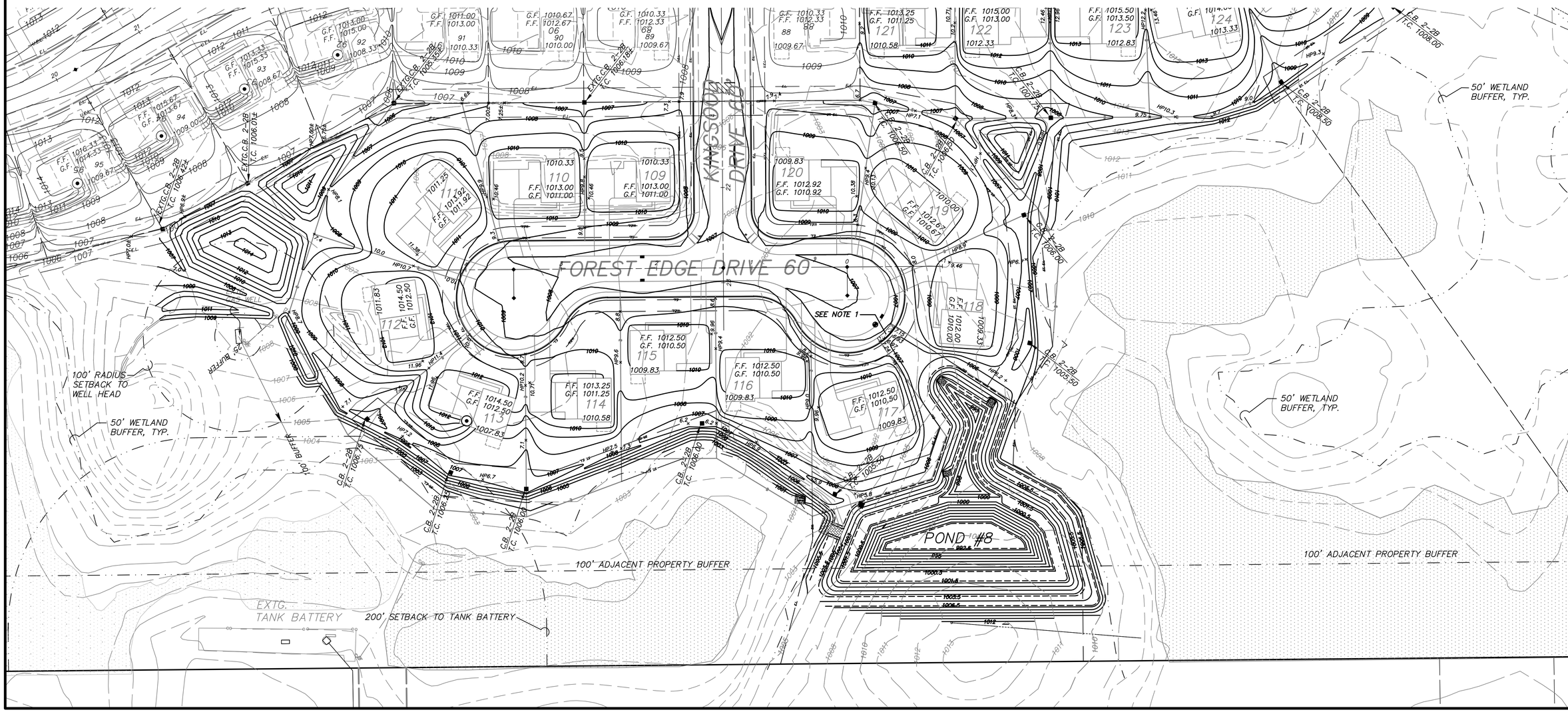

GRADING PLAN
THE RESERVE AT RIVER OAKS ~ PHASE 3
CITY OF HUDSON
SUMMIT COUNTY, OHIO

DONALD G. BOHNING & ASSOCIATES, INC.
CIVIL ENGINEERING & SURVEYING
7979 HUB PARKWAY * VALLEY VIEW, OHIO 44125
PHONE: (216) 642-1130 FAX: (216) 642-1132
M:\jobdata\jobs\4272-3\DWG\4272D03 29-30 (Grading).dwg 12/5/2017 11:05 AM

GRAPHIC SCALE 0' 25' 50'

HORIZ. SCALE 1"=50'

VERT. SCALE ----

DR'N DER CKD. T.C.

DATE NOV., 2017

ORDER NO. 4272-3

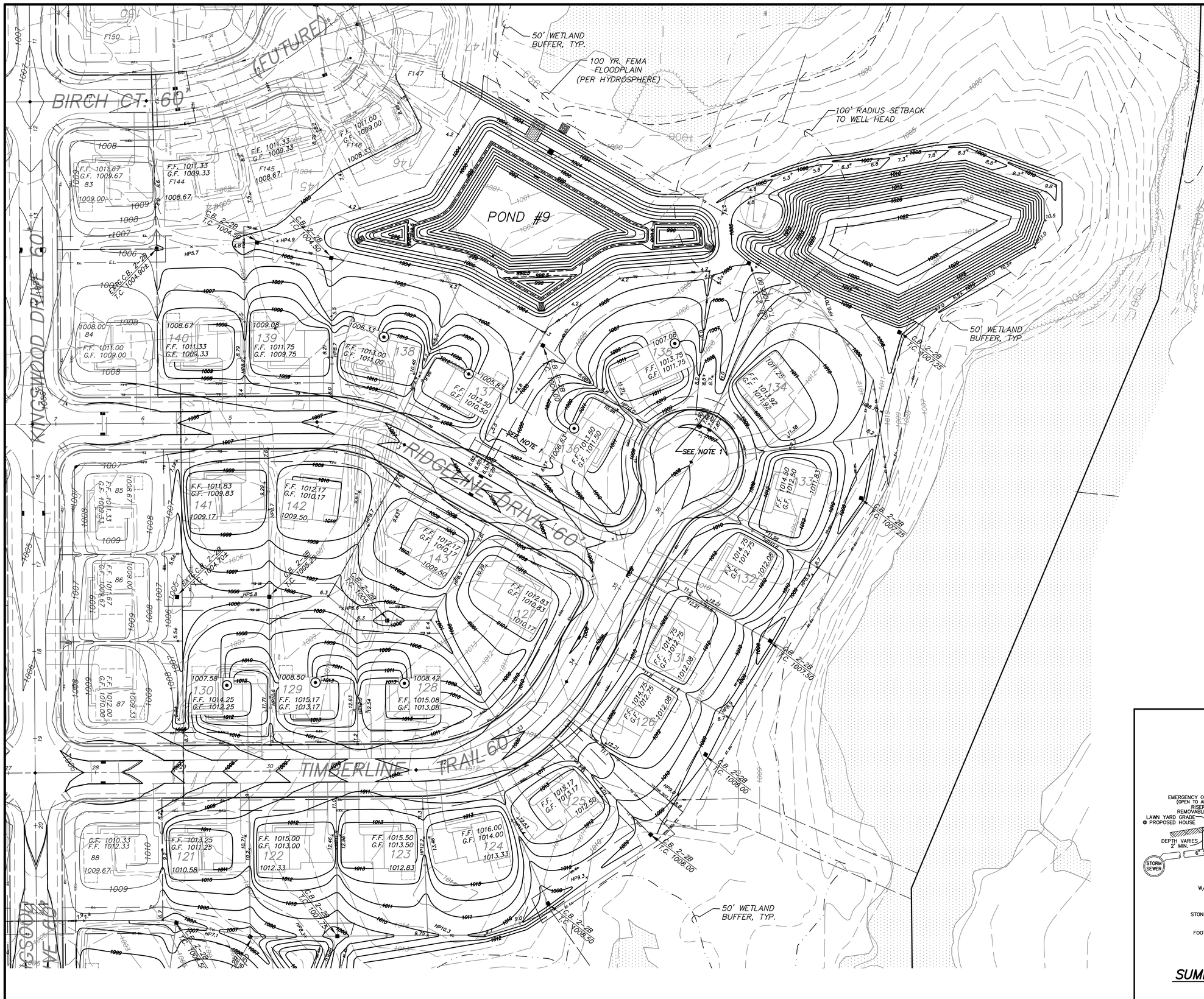

LEGEND

SYMBOL	DESCRIPTION
	RIGHT-OF-WAY
	EDGE OF PAVEMENT
	CENTERLINE
	EDGE OF PAVEMENT
	RIGHT-OF-WAY

EXISTING	PROPOSED	DESCRIPTION
1003	1003	CONTOUR
4	1006.33 77 F.F. 1009.00 G.F. 1007.00	FINISH GRADE @ REAR OF HOUSE (LOWEST ELEV. OF OPENING); SUBLOT No.; APPROX. FIN. FLOOR ELEV.; APPROX. GAR. FLOOR ELEV.; DWELLING
		IN./CATCH BASIN
C.B. 2-2B T.C.XXXX.XX	C.B. 2-2B T.C.XXXX.XX	CATCH BASIN 2-2B & 2-3
	+44.01	FINISH GRADE ELEVATION

NOTE:

GENERAL HOUSE FOOTPRINT & GRADING AS PROPOSED ARE FOR GENERAL DRAINAGE PURPOSES ONLY. EACH HOME SITE PLOT PLAN SHALL ESTABLISH ACTUAL FINAL LOT GRADING AND BUILDING FOOTPRINT WITH FLOOR ELEVATIONS.

ADD 1,000' TO ALL SPOT ELEVATIONS SHOWN.

⊙ — INDICATES PROPOSED "WINDOW" BASEMENT

NOTES:

1. DEPRESS SIDEWALK 3" FOR 10' TO PROVIDE EMERGENCY FLOW CORRIDOR TO RETENTION POND
2. ALL STORMWATER MANAGEMENT PONDS SHALL BE OWNED AND MAINTAINED BY THE RESERVE AT RIVER OAKS HOA. THE CITY OF HUDSON SHALL HAVE THE RIGHT TO ACCESS AND MAINTAIN SAID AREAS.
3. NO ENCROACHMENTS ARE PERMITTED INTO THE SWALES / STORM EASEMENTS THAT IMPEDE THE FLOW OF WATER IN THESES AREAS.

NOTE: ROOF DRAINS SHALL BE CONSTRUCTED TO TIE INTO 6" STORM CONNECTION AND NOT TO SUMP PUMP OR FOOTER DRAIN.

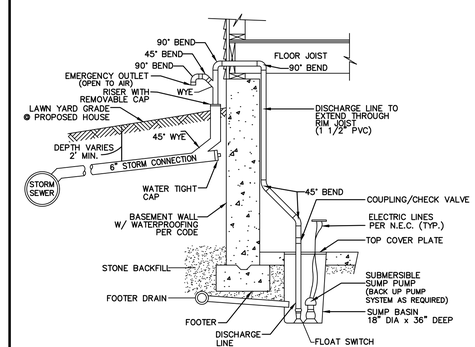

SUMP PUMP CONNECTION DETAIL

NO SCALE

REVISIONS

GRADING PLAN
THE RESERVE AT RIVER OAKS ~ PHASE 3
CITY OF HUDSON
SUMMIT COUNTY, OHIO

DONALD G. BOHNING & ASSOCIATES, INC.
CIVIL ENGINEERING & SURVEYING
7379 HUB PARKWAY • VALLEY VIEW, OHIO 44125
PHONE: (216) 642-1330 FAX: (216) 642-1332
M:\drawings\4272-3\DWG\4272X3 2B-3G (Grading).dwg 12/5/2017 11:05 AM

GRAPHIC SCALE 0' 25' 50'

HORIZ. SCALE 1"=50'

VERT. SCALE ----

DR'N	CKD.
DER	T.C.

DATE NOV., 2017

ORDER NO. 4272-3

TMS Engineers, Inc

Traffic Impact Study

River Oaks ~ Phase 3
Hudson, Ohio

December 28, 2017

Prepared for:

The Pulte Group
387 Medina Road
Suite 1700
Medina, Ohio 44256

TRAFFIC IMPACT STUDY

River Oaks ~ Phase 3
Hudson, Ohio

December 28, 2017

Prepared For:

The Pulte Group
387 Medina Road
Suite 1700
Medina, Ohio 44256

Prepared By:

TMS Engineers, Inc.
2112 Case Parkway South
Unit #7
Twinsburg, Ohio 44087

REGISTERED ENGINEER NO. E56982
CERTIFICATION NO. 2234

"This document was prepared consistent with local agency requirements and/or applicable guidelines contained in this report."

Executive Summary

This traffic study has been prepared at the request of The Pulte Group for the River Oaks residential Phase 3 development to update a previous traffic impact study that was prepared in 2013. The purpose of this study is to compare and contrast existing trip generation from the current site with that forecasted in the 2013 study and to determine if additional improvements are justified. The project site is located in the City of Hudson, Summit County, Ohio along the south side of Boston Mills Road.

The development is expected to consist of the following land use at its full build out:

Single Family Detached Housing- 195 Units

The development has two intersecting streets on Boston Mills Road to provide access. The western access is Timberline Trail and the eastern access is Majestic Oaks Drive.

The year 2017 will be analyzed for the existing year condition and 2022 is the expected full build out year. The year 2042 will be analyzed as the design year for the twenty year conditions.

The weekday peak hours of traffic for the study area roadways was based on the traffic data collected for this report. The weekday AM peak hour of traffic was determined to be 8:00 AM tp 9:00 AM. The weekday PM peak hour of traffic was found to be 5:00 PM to 6:00 PM. These periods were analyzed since they reflect the period of the highest volume of traffic flow for the study area roadways and the proposed development.

Sixty-eight units are currently constructed and inhabited. The existing trip generation of the 68 units was compared to the expected trip generation from ITE rates and is shown in the table on the following page:

ITE TRIP GENERATION		SIZE	TRIP ENDS			
ITE Code	Description		AM Weekday Peak Hour (Enter/Exit)		PM Weekday Peak Hour (Enter/Exit)	
210	Single Family Detached Housing	68 (Exist.)	8	20	30	23
		68 (ITE)	15	42	47	27
		DIFFERENCE	**7**	**22**	**17**	**4**
		TOTAL NEW TRIPS	**29**		**21**	

The following table shows the expected trip generation for full build-out of the development in 2022 based upon the measured trip generation rate.

TRIP GENERATION	SIZE	TRIP ENDS			
Description		AM Weekday Peak Hour (Enter/Exit)		PM Weekday Peak Hour (Enter/Exit)	
Single Family Detached Housing	195 Units	21	52	91	52
Total Trip		**73**		**143**	

Recommended Improvements to Serve Existing Conditions

No intersection improvements are recommended to accommodate the existing year 2017 traffic conditions at the study area intersections.

Recommended Improvements to Mitigate the Traffic Associated with the Development

No intersection improvements were found to be necessary to accommodate the Year 2022 and 2042 Build traffic at the study area intersections. The development access drive at Timberline Trail and Majestic Oaks was found to not warrant left or right turn deceleration lanes.

Development Access Recommendations

The existing lane use and traffic controls are recommended to remain in order to accommodate the 2022 and 2042 site generated (Build) traffic at the development access locations along Boston Mills Road at Timberline Trail and Majestic Oaks Drive. No further improvements were found to be necessary.

Conclusion

Based upon the results of the analysis in this study and the corresponding recommendations, it can be seen that the development traffic can be accommodated without adversely impacting the area roadway network.

DAVEY RESOURCE GROUP

A Division of The Davey Tree Expert Company

Corporate Headquarters

1500 North Mantua Street

PO Box 5193

Kent, Ohio 44240-5193

330.673.5685

Toll Free 1.800.828.8312

Fax 330.673.0860

December 8, 2017

Brad Piroli, Vice President of Land Acquisition
Pulte Homes of Ohio, LLC
387 Medina Road, Suite 1700
Medina, Ohio 44256

RE: *Water Resources Evaluation* — River Oaks Subdivision, Phases 3, 4, and 5, Boston Mills Road, Hudson, Summit County, Ohio

Dear Mr. Piroli:

On December 8, 2017, Davey Resource Group, a division of The Davey Tree Expert Company, conducted a water resource evaluation for Phases 3, 4, and 5 of the River Oaks subdivision located south of Boston Mills Road in Hudson, Summit County, Ohio. The study area was evaluated by Senior Biologist Greg Snowden in accordance with the procedures outlined in the *Corps of Engineers Wetlands Delineation Manual* (Environmental Laboratory 1987) and *Regional Supplement to the Corps of Engineers Wetland Delineation Manual: Northcentral and Northeast Region* (U.S. Army Corps of Engineers 2012).

The project site consists of previously disturbed upland areas that were cleared and rough graded several years ago during initial construction of the residential subdivision. The project was authorized by the U.S. Army Corps of Engineers under Section 404 of the Clean Water Act (Department of Army No. 2000-02403). No regulated aquatic resources are present within the footprint of Phases 3, 4, and 5 of the River Oaks site. Several sediment traps identified on the project's stormwater pollution prevention plan are located within the study area; however, per 33 CFR 328.3(a)(8), these man-made features, which were designed to meet the requirements of the Clean Water Act, are not Waters of the United States and are not regulated. Previously delineated wetlands that were avoided as part of initial phases of the development remain in natural areas, outside Phases 3, 4, and 5. The boundaries of these resources were reviewed and past delineation mapping appears to accurately reflect existing conditions in these portions of the property. Photographs of the study area documenting current site conditions are provided in Attachment A.

If you have any questions regarding the content of this letter, please contact me at 800-828-8312, extension 8008 or by email at greg.snowden@davey.com. Thank you for allowing us to assist you with this project.

Sincerely,

Greg Snowden, MS, PWS, Senior Biologist
Natural Resource Consulting

Attachment A
Site Photographs

Photograph 1 (12-8-17). The majority of the study area consists of uplands that were previously cleared and graded during initial construction of the subdivision.

Photograph 2 (12-8-17). Several small, man-made sediment traps are located on the site; these are non-jurisdictional features and are not regulated.

Photograph 3 (12-8-17). Avoided wetlands, located outside of the footprint of Phases 3, 4, and 5 of the River Oaks development, have not changed substantively since initial project approval.

OHIO
HUDSON
COMMUNITY DEVELOPMENT ● 115 Executive Parkway, Suite 400 ● Hudson, Ohio 44236 ● (330) 342-1790

DATE:	November 21, 2017
TO:	Brad Piroli, Pulte Homes
FROM:	Greg Hannan, City Planner, Community Development
SUBJECT:	Final Plat and Improvement Plan for Reserve at River Oaks – Phase III – Sublots 109-140
Zoning:	District 3: Outer Village Residential Neighborhood

Staff understands applicant is preparing to apply for the Final Plat and Improvement Plans application for the Reserve at River Oaks Phase III. In preparation for such, I am forwarding preliminary comments related to compliance with the Land Development Code (LDC) based on review of the plan dated November 2017.

Previous Applications

Case#	Meeting Date	Action
2014-01	March 10, 2014	Compatibility review
2014-05	April 14, 2014	Final Plat and Improvement Plans approval for Phase I
2015-01	January 26, 2015	Preliminary Subdivision Plan approval for Subdivision with western parcel incorporated.
2015-10	May 11, 2015	Final Plat and Improvement plans for Phase II (recorded September 11, 2015)
2016-17	July 7, 2016	Grading approval for future phases

<u>Effect of Approval of a Preliminary Subdivision Plan.</u>
The Phase II Final plat was recorded on September 11, 2015. As more than 12 months has passed since this recording the previous preliminary subdivision plan approval has expired. Application for preliminary plan approval will also need to be submitted.

Chapter 1205– District Regulations
Dimensional Standards: Acceptable

Building Siting and Orientation

1. A garage that accommodates at least two cars shall be provided
2. Doors of an attached garage shall not face the street.

3. The front wall of the structure shall be parallel to the street or perpendicular to the radius of the curve.
4. The main entrance shall face the street

Pedestrian pathways and linkages

1. Provisions shall be made for sidewalks, pathways, and bikeways.
2. Sidewalks shall be provided on both sides of the street and along the south side of Boston Mills Road.
3. Boston Mills Road pathway – The development plans for this trail section should be formally incorporated into the improvement plans for Phase III.

Chapter 1207 Zoning Development and Site Plan Standards

Wetland/Stream Corridor Protection: The existing development area includes adjacent wetland areas. Current wetland documentation should be submitted for review in connection with the proposed grading design.

Open Space: The previously reviewed preliminary plan acknowledged acceptable open space.

Special Development Standards: Oil/Gas Exploration and Drilling Uses: Two gas wells are located adjacent to sublots within Phase III. Residential sublots have not been proposed within the applicable setbacks.

Submittal Requirements:
Please refer to the submittal requirements within the Appendix for the LDC for the Preliminary Plan and Final Subdivision Plan submittals.

Step	Meeting	Fee
Preliminary Subdivision	Planning Commission Submittal by 12/11 for the 1/11 mtg or Submittal 1/15 for 2/12 mtg	$1,500 plus $50 per lot
Final Plat and Improvement Plans	Planning Commission Submittal by 12/11 for the 1/11 mtg or Submittal 1/15 for 2/12 mtg	$2,500 plus $50 per lot

OHIO
HUDSON
ENGINEERING • 115 Executive Parkway, Suite 400 • Hudson, Ohio 44236 • (330) 342-1770

MEMORANDUM

Date: December 4, 2017

To: Kris McMaster, Hudson Community Development

From: Bradley S. Kosco, P.E., P.S., Assistant City Engineer

Re: **The Reserve at River Oaks Phase 3 Plan & Plat Review**

The City of Hudson Engineering Department has reviewed the above residential site plan received December 27, 2017 (please contact our office if you would like to review in detail).

Please see the redline comments on the submitted set of plans corresponding to this letter. The following review comments shall be addressed and all applicable items shall be resubmitted to the City of Hudson:

General Comments:

1. City of Hudson infrastructure shall be designed in accordance with the City of Hudson Engineering Standards which can be found at: http://www.hudson.oh.us/index.aspx?NID=205 (CAD details are available upon request).
2. Provide a certified engineer's estimate for the construction costs for the following items:
   a. All infrastructure within the future public right-of-way
   b. All sediment and erosion control
3. The Summit County Department of Sanitary Sewer Services shall approve the proposed sanitary sewer installation. Please provide a copy of the approval letter from the DOSSS.
4. Provide all EPA approvals for the water and sanitary sewer installations.
5. Provide approval from Summit Soil and Water Conservation District for SWPP plan and calculations.
6. Show 100-year flood path along major storm system. Path shall be designed in accordance with City of Hudson Engineering Standards, Section 5 – Storm Water Management.
7. Per the City of Hudson Engineering Standards Section 4 – all catch basins greater than 4' deep shall be 3'x3' catch basins with steps.
8. Verify that all downspout connections near proposed ponds #8 and #9 are provided above the 100-year pond elevation.
9. Add note that the developer is responsible for all street signage.

Plan and Profile Sheets

1. Verify that all homes have future connection to storm sewer system provided. Provide elevation of storm lateral tie-in at storm sewer main or inlet.
2. Provide storm sewer connections at catch basins or curb inlets where possible.

3. Invert of storm sewer laterals discharging to retention pond (if any) will be above the 100-year flood elevation.
4. Eliminate water main bends were possible via deflection of pipe in accordance with manufacture's requirements. Water main could be installed at five (5) foot depth to alleviate conflict points.
5. Evaluate eliminating having two separate curb inlets in cul-de-sacs. Can the gutter slope be changed to move the low spot? Would a double (side by side) inlet be better?

Pond Plans and Details

1. Label 100-year pond elevation in profiles and control structure details.
2. Label normal water elevation and 100-year elevation in detail grading plan.

Grading Plan

1. Call out 100-year, major, flood paths and label (same as previous submittals) per City of Hudson Engineering Standards, Section 5.2.
2. Verify that basement floor elevations are above the proposed storm water management pond's 100-year elevations.
3. Provide cross sections for 100-year, major, flood path (same as previous submittals)

Storm Water Management and Sewer Calculations

1. Provide 100-year flood path cross section design calculations.
2. Verify that no ponding at catch basin grates and curb inlets will block roadways, driveways or obstruct drainage flows away from homes.

Plat Comments

1. See redline comments on submitted plat.
2. Provide closure sheets with next submittal.

Traffic Impact Study

1. The Traffic Impact Study is still being reviewed. Any comments will be submitted under separate cover.

If you have any questions, please contact our office.

Respectfully,

Bradley S. Kosco, P.E., P.S.
Assistant City Engineer

C: Tony Calabro, Construction Inspector

S:\PRIVATE PROJECTS\RESIDENTIAL_SUB-DIVISIONS\Reserve at River Oaks PH3\Res at River Oaks Ph 3 Plan & Plat Review Letter 1418.docx

FINAL SUBDIVISION IMPROVEMENT AGREEMENT

THIS AGREEMENT, made at Hudson, Ohio, this ____ day of _____, 201_, by and between **Pulte Homes of Ohio, LLC** (hereinafter referred to as "Developer") and ***Hudson, Ohio,*** a municipal corporation organized as a city under the laws of the State of Ohio (hereinafter referred to as "City").

WITNESSETH:

WHEREAS, Developer is desirous of developing certain lands situated in the City, known as Reserve at River Oaks Subdivision, Phase 3; and

WHEREAS, a final plat for said Reserve at River Oaks Subdivision, Phase 3, has heretofore been filed with the Planning Commission of the City, and said Planning Commission has approved the final plat at its regularly schedules meeting of January 8, 2018 which is to be recorded with the Summit County Recorder's Office; and

WHEREAS, Developer desires to comply with the "Land Development Code" of the City of Hudson, so that it may proceed with the improvements for Reserve at River Oaks Subdivision, Phase 3; and

WHEREAS, the Planning Commission recommends the execution of this Agreement between the City and Developer.

NOW, THEREFORE, IT IS AGREED THAT:

1. The Developer will complete the improvements for Reserve at River Oaks Subdivision, Phase 3 (hereinafter referred to as "Subdivision"), as further defined herein, within a period of eighteen (18) months from the date of approval by the City of the Performance Bond (s), an irrevocable letter(s) of credit, or any other security acceptable to the City, for the various portions of construction with proper surety in the amount of One Hundred Ten Percent (110%) of the cost of the improvements as a condition of the approval of the Planning Commission, and as a guarantee that such work will be completed. The Developer, at its discretion, may have up to three (3) years to complete installation of the sidewalks, pathways, street trees and street lighting improvements to the

Subdivision. The total cost of the improvements to be done has been determined by the City Engineer as an estimate of cost in the amount of $XX,XXX for Phase 3 improvements. All improvements are to be done in accordance with the plans and specifications for such improvements approved by the Planning Commission and City Engineer which by reference hereto are made a part hereof and are dated _____, as may be revised and approved by the City Engineer.

3. All such improvements shall be inspected during the course of construction and improvement by an inspector appointed by the City Manager, the compensation for which and other costs shall be paid by Developer. The estimated cost of inspection of Phase 3 improvements is $XXXX.

The initial deposit with the City by the Developer for the inspection costs shall be $XXXX, which amount shall be deposited with the City prior to construction of the improvements commencing. When the costs of inspection are within $1,000 of exhausting the initial $XXXX, the Developer will be notified in writing of the need to deposit the remaining $XXXX the required deposit and shall have ten (10) calendar days from the date of the written notice to deposit said $XXXX. No Zoning Certificate for new houses shall be issued until the second deposit for inspection costs is submitted.

In the event the cost of inspection exceeds the amount on deposit at any time, the City shall have the right to demand a sum of money to bring the deposit equal to the actual cost of inspection within ten (10) days of written notice upon the Developer, whether or not the actual cost of inspection exceeds the estimate of $XXXX. Failure to comply with the written demand to bring the inspection deposit current shall be cause to stop all work upon the improvements until such demand is complied with.

4. The Performance Bond (s), an irrevocable letter(s) of credit, or any other security

acceptable to the City, shall be conditioned upon completion of the improvements as shown on the improvement plans and conditioned that the Developer will construct and install all of said improvements at its own expense within eighteen (18) months from the date of approval by the City of the Performance Bond, irrevocable letter of credit, or any other security acceptable to the City. No Zoning Certificate for new houses shall be issued until completion of the improvements, except for sidewalks, trails, street trees and street lighting. Notwithstanding the foregoing sentence, no Zoning Certificate for a house shall be issued after the three (3)-year anniversary of the date of this Agreement, unless the installation of all sidewalks, trails, street trees and street lighting is complete and accepted by the City Engineer.

5. Upon completion of the improvements and receipt of the approval of the City Engineer and before the Performance Bond(s), irrevocable letter(s) of credit or other security is released by the City, the Developer shall submit a Maintenance Bond in an amount equal to Fifteen Percent (15%) of the final construction cost to guarantee the workmanship and material for a period of two (2) years following the completion of the improvements.

6. In the event that the Developer defaults on its obligations hereunder to construct the improvements in accordance with the City specifications and approval, the City shall have the right to collect the proceeds of the financial guarantee and to enter upon the property of the Developer to make the appropriate improvements and to withhold additional Zoning Certificates until the default is corrected or the City collects on the proceeds.

7. Developer shall also, prior to commencement of construction, file with the City a Certificate of Public Liability Insurance in an amount not less than One Million Dollars ($1,000,000.00) for personal injuries, including wrongful death due to injuries and subject to the same limit for each person, and an amount of not less than Three Million Dollars ($3,000,000.00) on account of any one accident, and property damage insurance with limits of One Hundred Thousand

Dollars ($100,000.00). This insurance shall be written with an acceptable company authorized to do business in the State of Ohio; shall be taken out before any operations of Developer are commenced; shall name the city as an additional insured; and shall be kept in effect until all operations shall be satisfactorily completed. The Developer shall provide title insurance in the amount of One Thousand Dollars ($1,000.00) meeting the approval of the City Solicitor, covering the streets, lands, and public improvements to be dedicated to public use, showing the good title to said dedicated streets, lands and public improvements in the name of the City of Hudson, Ohio.

8. Upon completion of construction of the improvements and approval by the City Engineer, Developer shall dedicate to the City all streets, lands and public improvements set forth in the final plat.

9. Upon completion of the work, Developer shall furnish to the City "as built" drawings on reproducible material and in a digital form approved by the City.

10. Upon execution of the Agreement and the deposit of all the items mentioned herein, the City will issue any applicable building and/or zoning permits provided that the applicants for said permits have met the necessary requirements for the issuance of said permits in the City's Land Development Code, including but not limited to growth management allocations.

11. This Agreement shall be made a part of and incorporated into any and all bonds or other security agreements that may be issued or entered into pursuant hereto.

IN WITNESS WHEREOF, the parties have set forth their hands the day and year first written above.

WITNESSES:

_____

_____

Pulte Homes of Ohio, LLC
("Developer")

By:_____
Signature

_____
Print Name and Title

WITNESSES:

_____

_____

CITY OF HUDSON, OHIO
(A Municipal Corporation - Incorporated as a City in Ohio)

By:_____
JANE HOWINGTON
CITY MANAGER

PLANNING COMMISSION
CITY OF HUDSON, OHIO

By: _____
ROBERT KAGLER, CHAIR

APPROVED AS TO LEGAL FORM:
MATHEW VAZZANA, ASSISTANT CITY ATTORNEY

By_____
MATHEW VAZZANA
ASSISTANT CITY ATTORNEY