PATIO and Fence Site Plan

Permeable SA^2 to include all lawn and landscape which is finished with mulch

lawn 1,055 ft^2

landscapes 2,978.50 ft^2

= 4,033.5 ft = 51.07%

Total property SA^2

7,897.428 = .1813 Ac

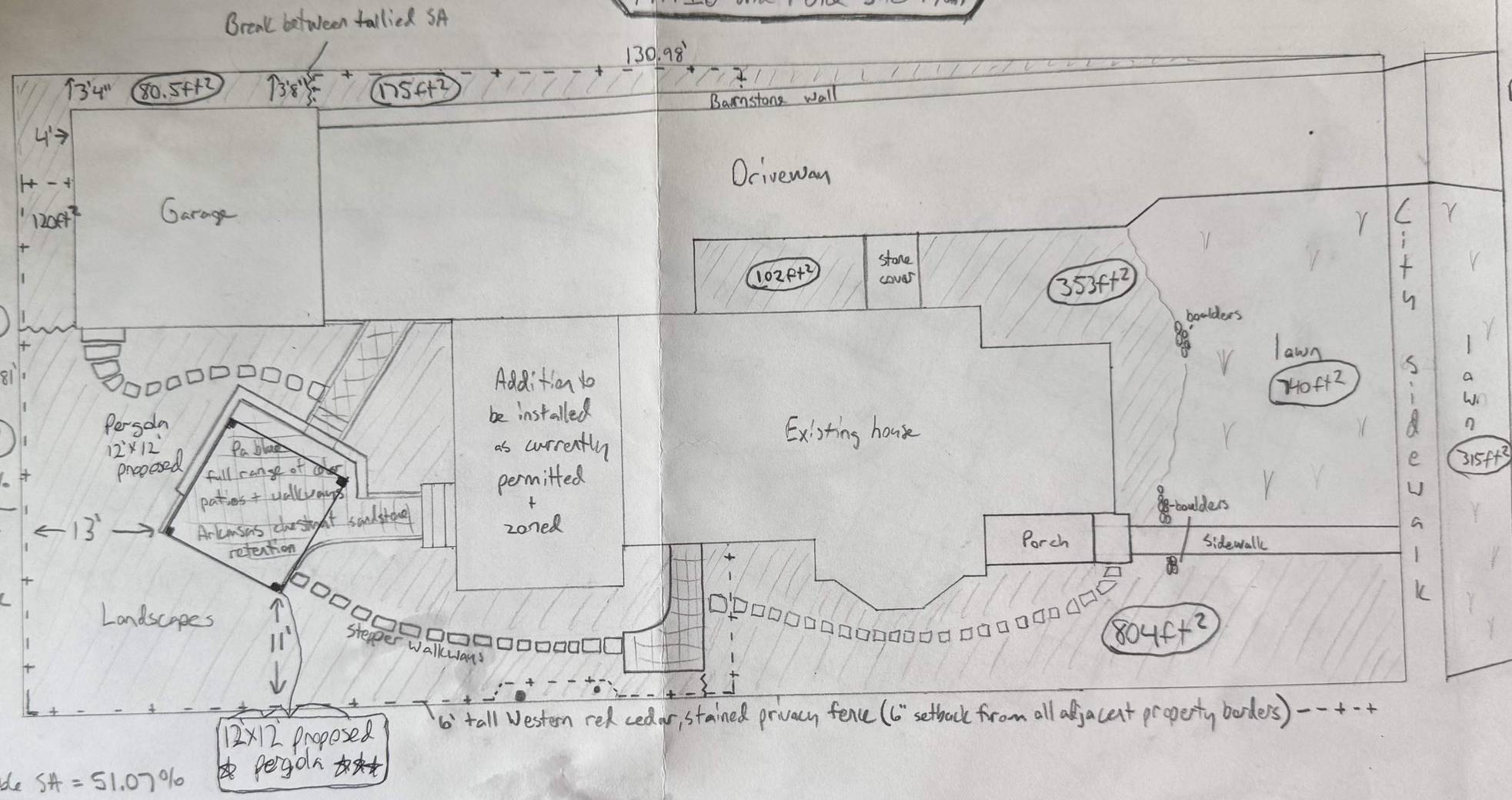

New proposed permeable SA = 51.07%

Old permeable SA = 54.01%

Deming Site Map
85 Division St.
Hudson, OH 44236

Scale

1" on map = 10' on site

1" = 10'

← N E + S W

Created by Daniel Hickin
of
Organic Roots
organicrootshort@aol.com
(330)620-1108

Perry Demming

PRESENTED BY:

KAUFFMAN LAWN FURNITURE

This document has been created exclusively for the advantage of the individual(s) mentioned above and for the project specified on this drawing. Any unauthorized use of this document by a third party or for purposes other than those explicitly outlined is strictly prohibited without the written consent of OutdoorLiving 3D.

DATE ISSUED:

March 13, 2026

ADDRESS

85 DIVISION ST
HUDSON, OH 44236

PROJECT SHEETS

A 100/COVER
A 101/ TOP PLAN
A 102/ TOP DETAIL PLAN
A 103/ SIDE ELEVATION
A 104/ FRONT ELEVATION
A 105/ LOUVER DETAIL
A 106/ GUTTER DETAIL
A 107/ POST DETAIL
A 108/ FOOTER DETAIL
A 109/ DETAIL
A 110/ DETAIL
A 111/ DETAIL

DRAWING #:
C-100

PAGE NAME:
COVER SHEET

PAGE #:
A100

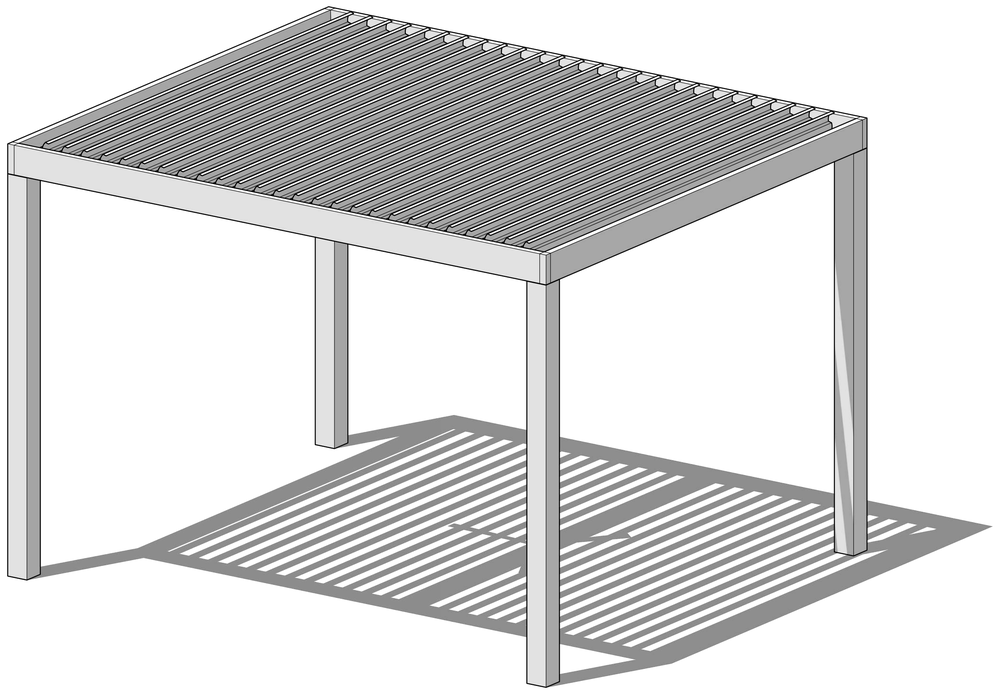

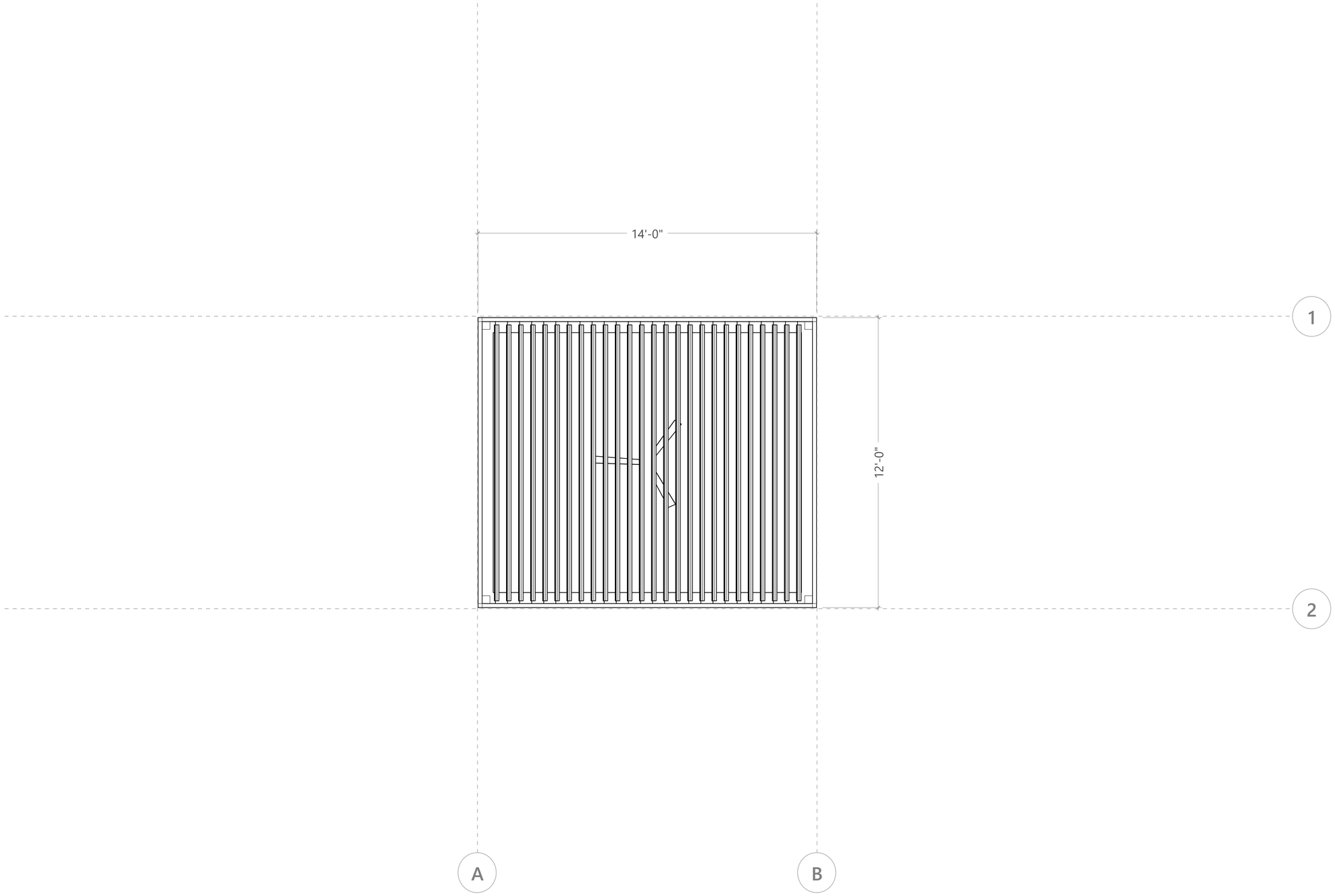

1 :: *TOP VIEW*

:: *Scale: 1/2" = 1'-0"*

Perry Demming

PRESENTED BY:

KAUFFMAN LAWN FURNITURE

This document has been created exclusively for the advantage of the individual(s) mentioned above and for the project specified on this drawing. Any unauthorized use of this document by a third party or for purposes other than those explicitly outlined is strictly prohibited without the written consent of OutdoorLiving 3D.

DATE ISSUED:

March 13, 2026

ADDRESS

85 DIVISION ST
HUDSON, OH 44236

DRAWING #:

1

PAGE NAME:

TOP VIEW

PAGE #:

A101

ALUMINIUM TYPE:

LOUVERS 6063-T5
ALL OTHER COMPONENTS 6063-T6

STRUXURE™ OUTDOOR

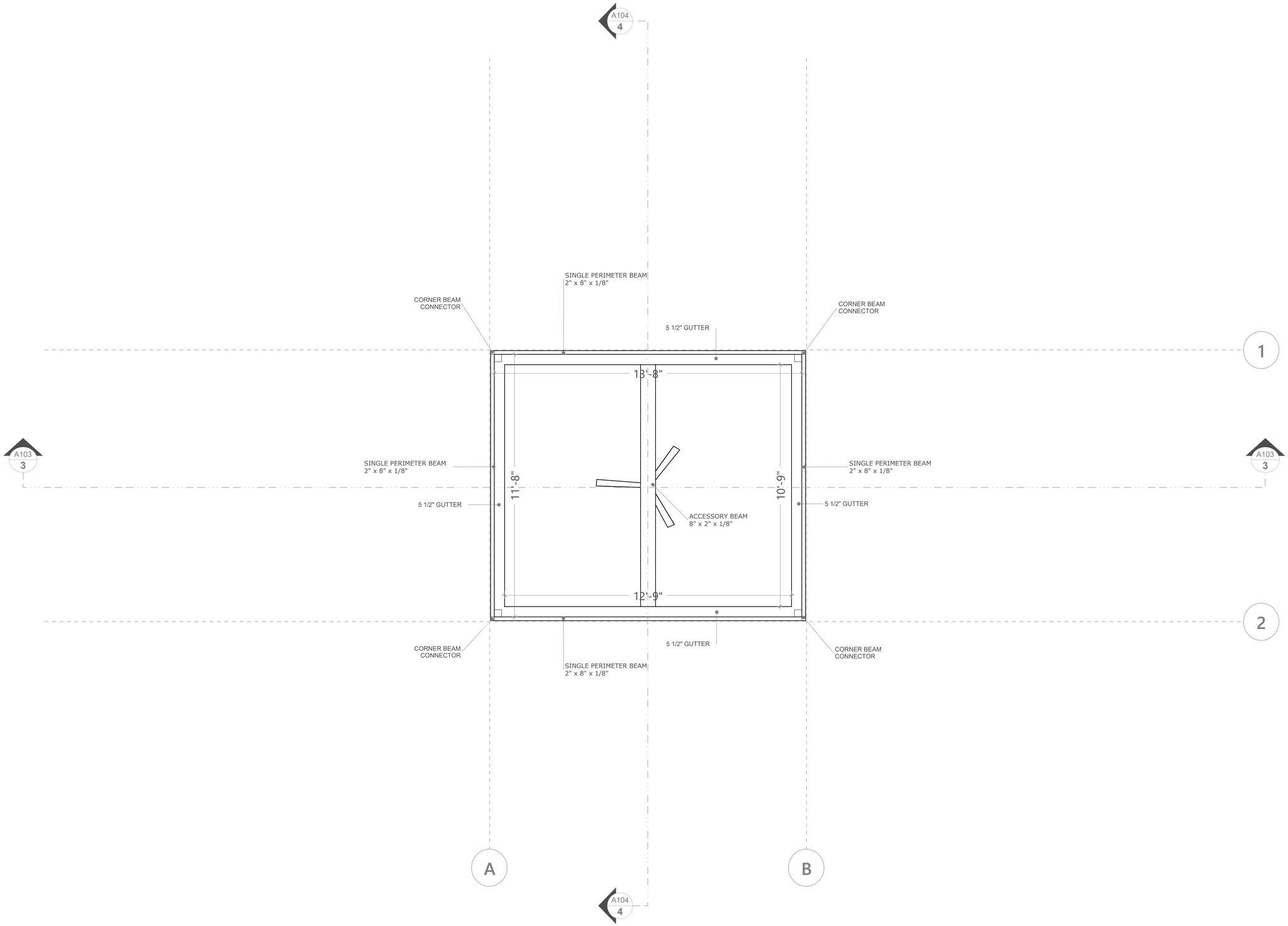

2 :: *BEAMS & GUTTERS PLAN*

:: *Scale: 1/2" = 1'-0"*

Perry Demming

PRESENTED BY:

KAUFFMAN LAWN FURNITURE

This document has been created exclusively for the advantage of the individual(s) mentioned above and for the project specified on this drawing. Any unauthorized use of this document by a third party or for purposes other than those explicitly outlined is strictly prohibited without the written consent of OutdoorLiving 3D.

DATE ISSUED:

March 13, 2026

ADDRESS

85 DIVISION ST
HUDSON, OH 44236

DRAWING #:

2

PAGE NAME:

BEAMS & GUTTERS PLAN

PAGE #:

A102

ALUMINIUM TYPE:

LOUVERS 6063-T5
ALL OTHER COMPONENTS
6063-T6

STRUXURE™ OUTDOOR

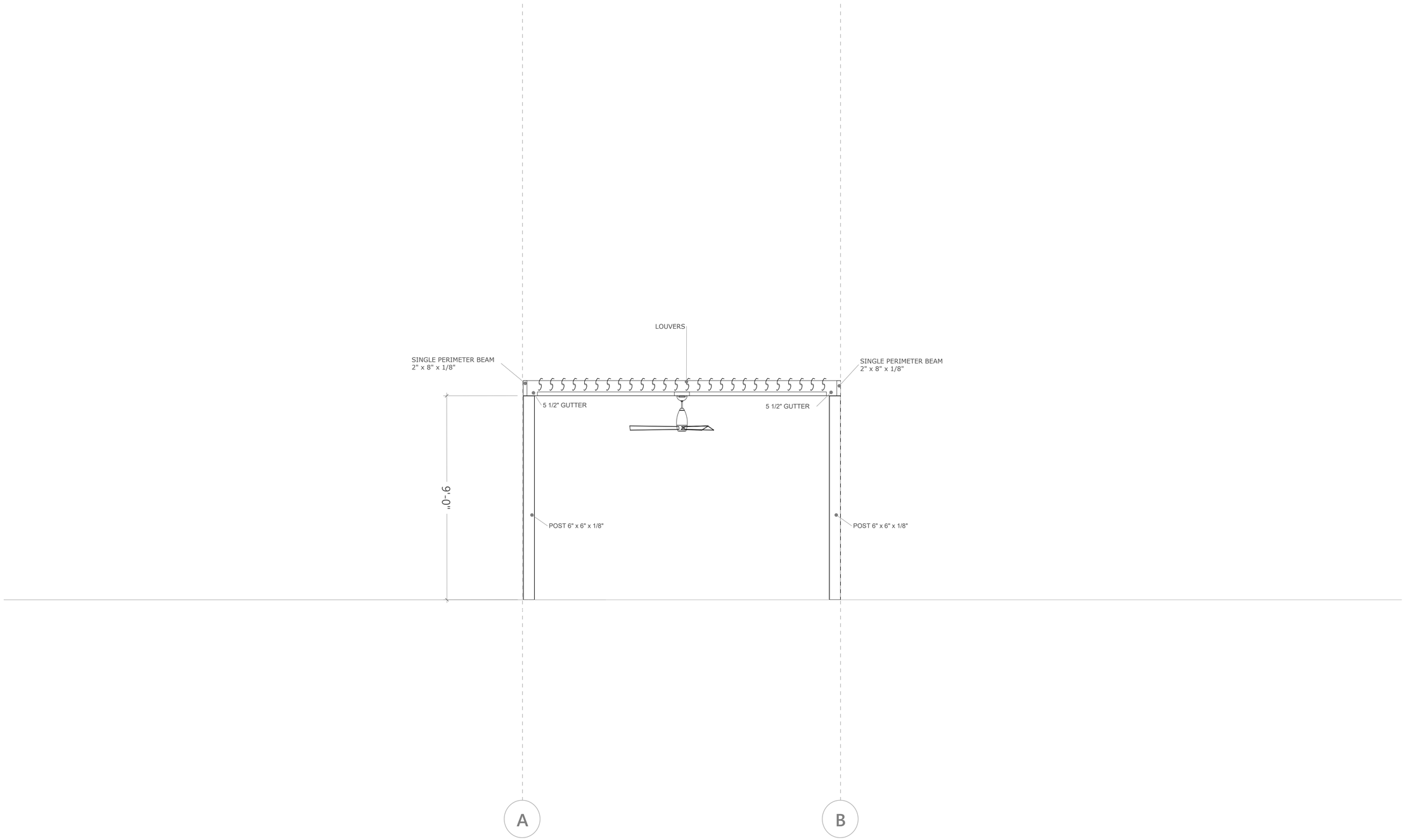

3 :: *FRONT ELEVATION*

::*Scale: 1/2" = 1'-0"*

Perry Demming

PRESENTED BY:

KAUFFMAN LAWN FURNITURE

This document has been created exclusively for the advantage of the individual(s) mentioned above and for the project specified on this drawing. Any unauthorized use of this document by a third party or for purposes other than those explicitly outlined is strictly prohibited without the written consent of OutdoorLiving 3D.

DATE ISSUED:

March 13, 2026

ADDRESS

85 DIVISION ST
HUDSON, OH 44236

DRAWING #:

3

PAGE NAME:

FRONT ELEVATION

PAGE #:

A103

ALUMINIUM TYPE:

LOUVERS 6063-T5
ALL OTHER COMPONENTS 6063-T6

STRUXURE™ OUTDOOR

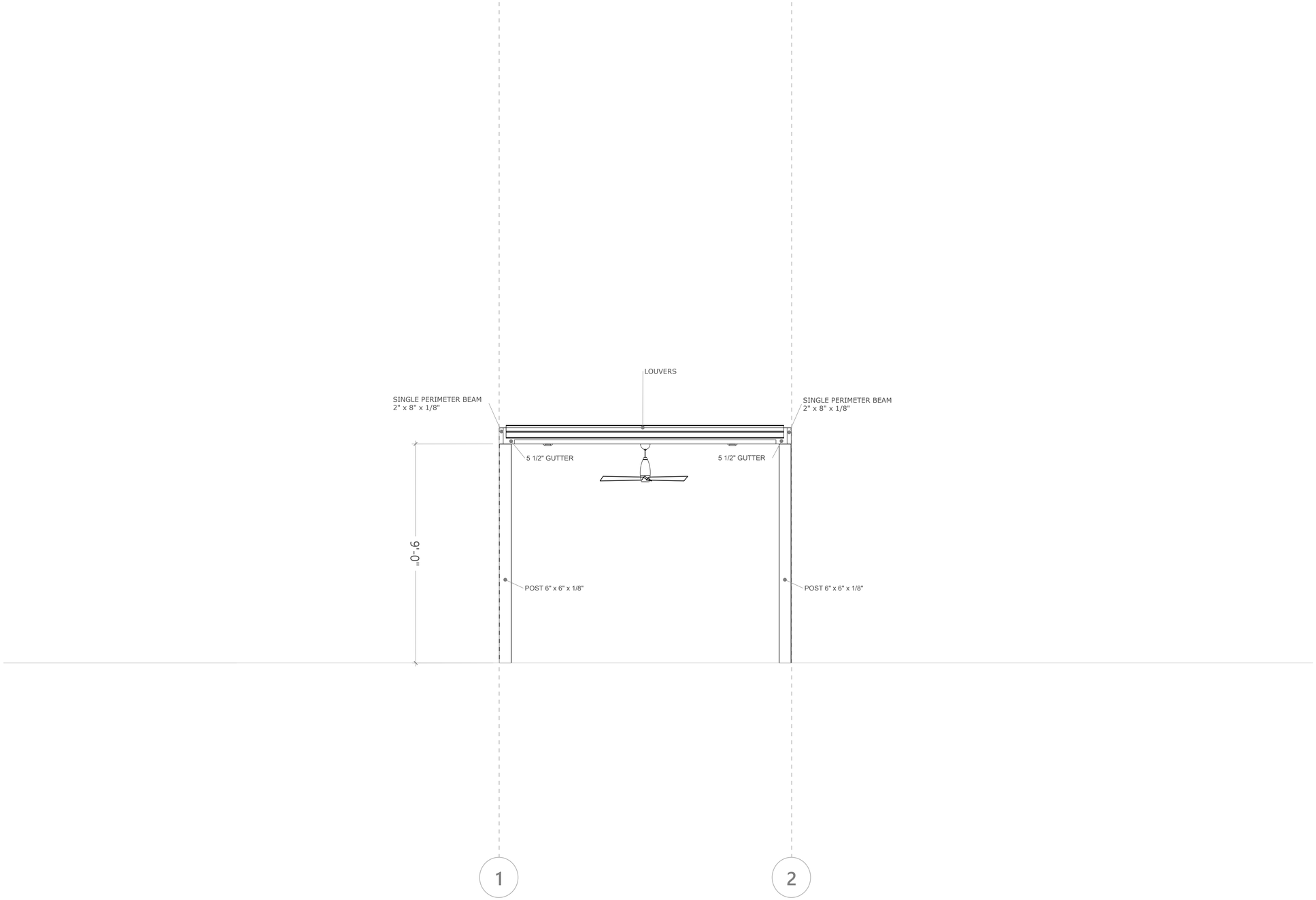

4 :: *SIDE ELEVATION*

:: *Scale: 1/2" = 1'-0"*

Perry Demming

PRESENTED BY:

KAUFFMAN LAWN FURNITURE

This document has been created exclusively for the advantage of the individual(s) mentioned above and for the project specified on this drawing. Any unauthorized use of this document by a third party or for purposes other than those explicitly outlined is strictly prohibited without the written consent of OutdoorLiving 3D.

DATE ISSUED:

March 13, 2026

ADDRESS

85 DIVISION ST
HUDSON, OH 44236

DRAWING #:

4

PAGE NAME:

SIDE ELEVATION

PAGE #:

A104

ALUMINIUM TYPE:

LOUVERS 6063-T5
ALL OTHER COMPONENTS 6063-T6

STRUXURE™ OUTDOOR

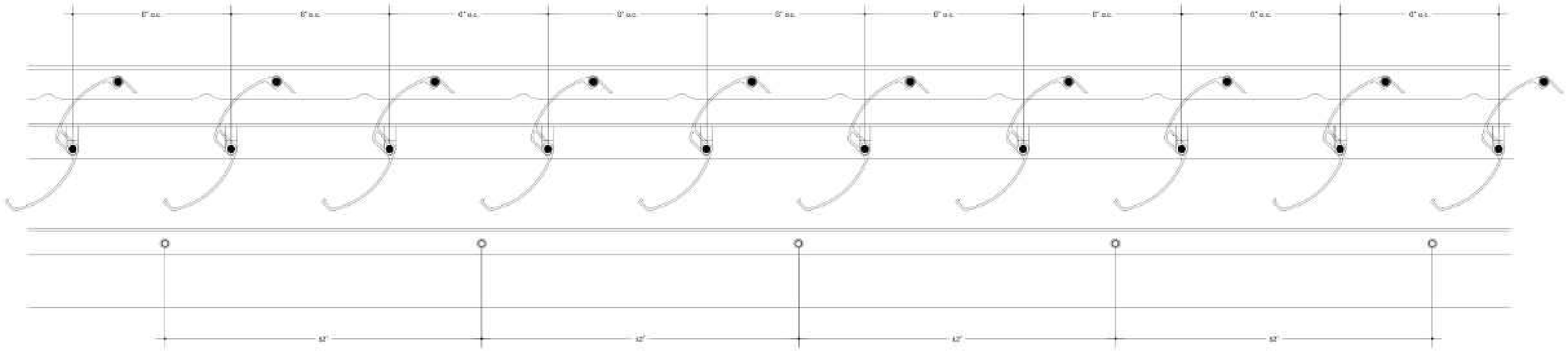

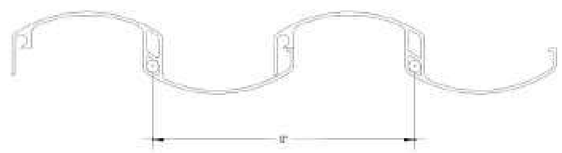

LOUVERS DETAIL

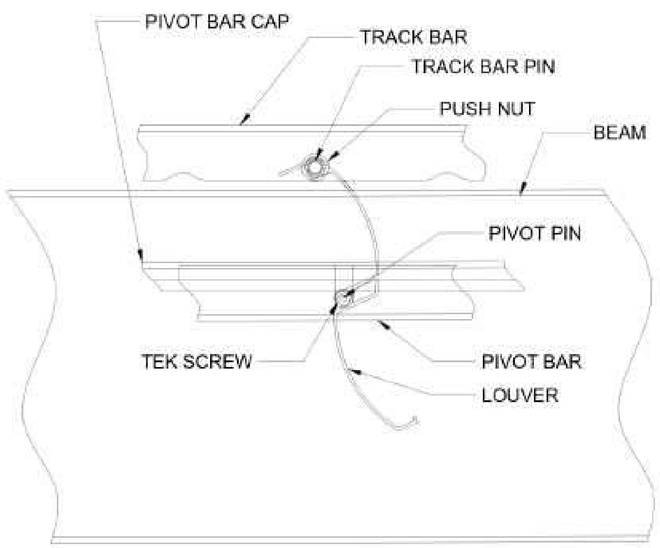

SIDE VIEW

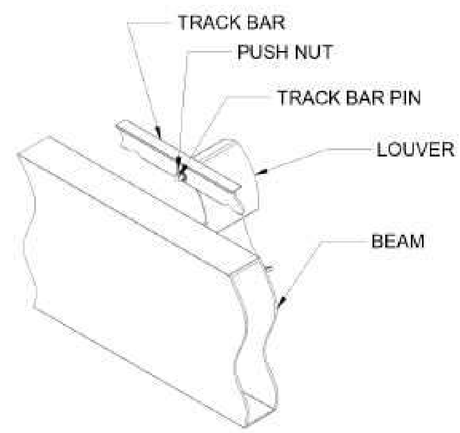

ISOMETRIC OUT-SIDE VIEW

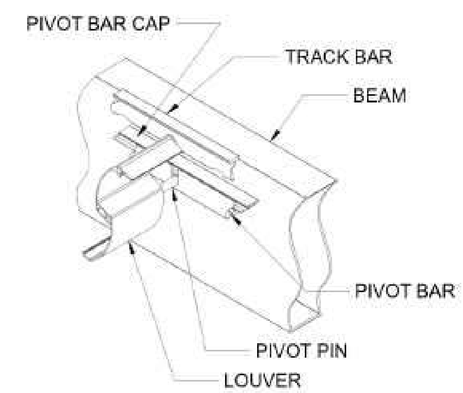

ISOMETRIC IN-SIDE VIEW

Perry Demming

PRESENTED BY:

KAUFFMAN LAWN FURNITURE

This document has been created exclusively for the advantage of the individual(s) mentioned above and for the project specified on this drawing. Any unauthorized use of this document by a third party or for purposes other than those explicitly outlined is strictly prohibited without the written consent of OutdoorLiving 3D.

DATE ISSUED:

March 13, 2026

ADDRESS

85 DIVISION ST
HUDSON, OH 44236

DRAWING #:

5

PAGE NAME:

LOUVER DETAIL

PAGE #:

A105

ALUMINIUM TYPE:

LOUVERS 6063-T5
ALL OTHER COMPONENTS
6063-T6

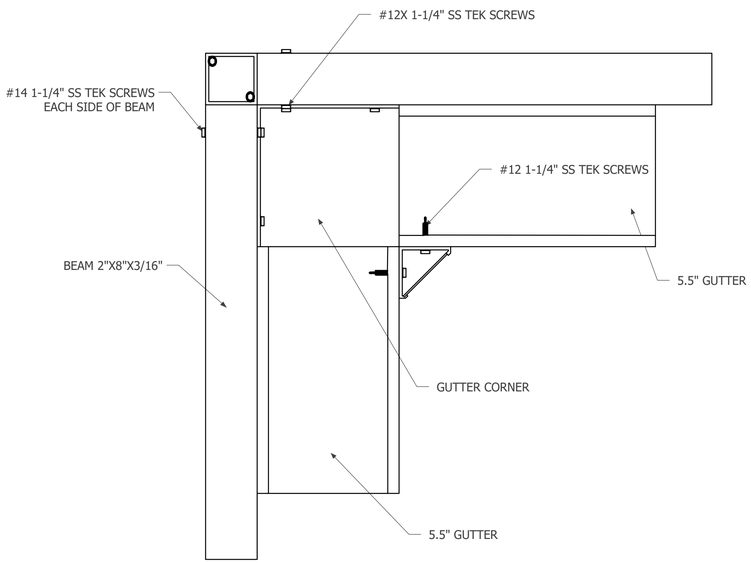

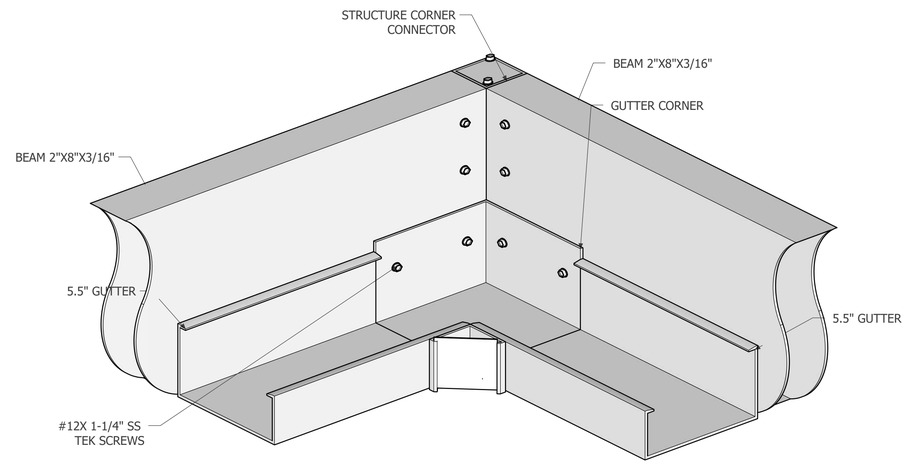

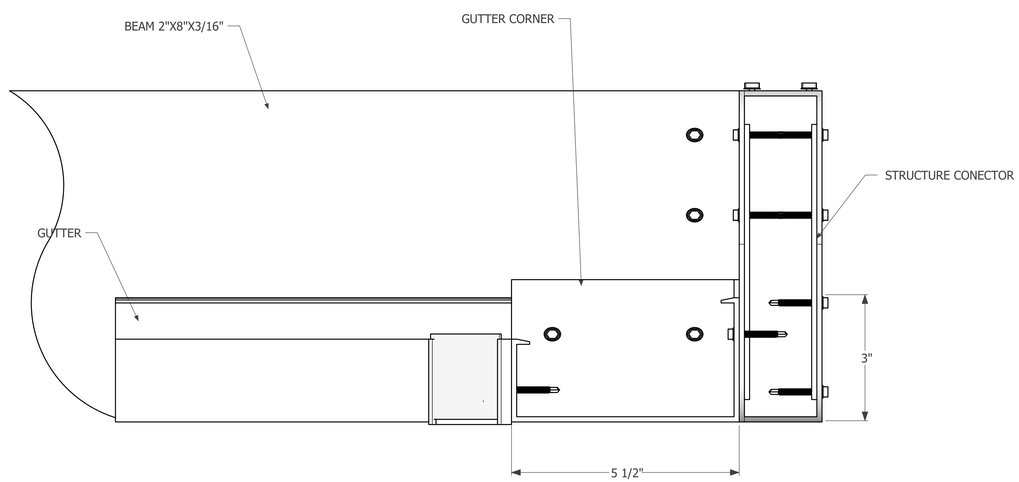

Perry Demming

PRESENTED BY:

KAUFFMAN LAWN FURNITURE

This document has been created exclusively for the advantage of the individual(s) mentioned above and for the project specified on this drawing. Any unauthorized use of this document by a third party or for purposes other than those explicitly outlined is strictly prohibited without the written consent of OutdoorLiving 3D.

DATE ISSUED:

March 13, 2026

ADDRESS

85 DIVISION ST
HUDSON, OH 44236

DRAWING #:

6

PAGE NAME:

GUTTER DETAIL

PAGE #:

A106

ALUMINIUM TYPE:

LOUVERS 6063-T5
ALL OTHER COMPONENTS
6063-T6

6 ::*GUTTER DETAIL*

STRUXURE™ OUTDOOR

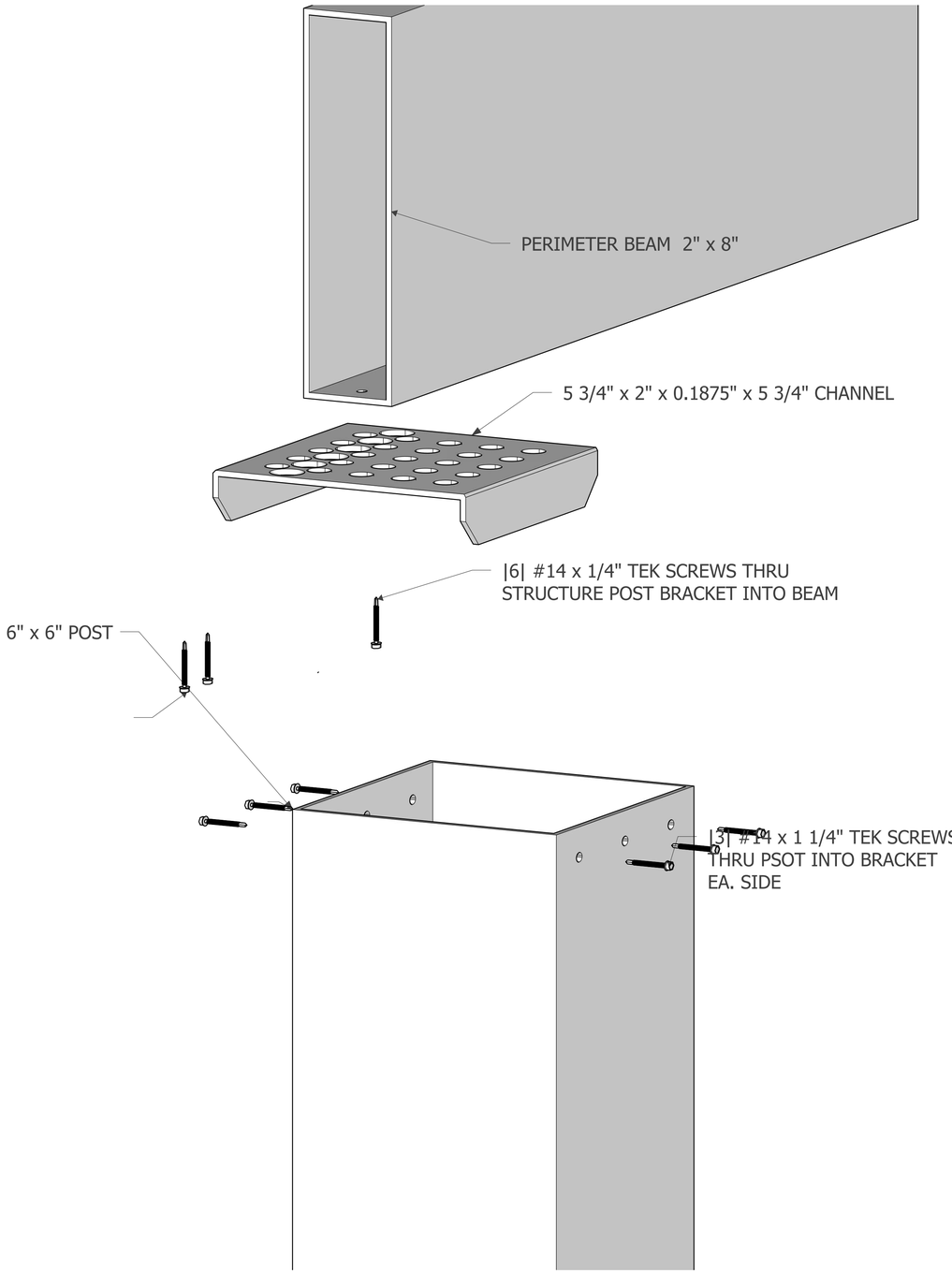

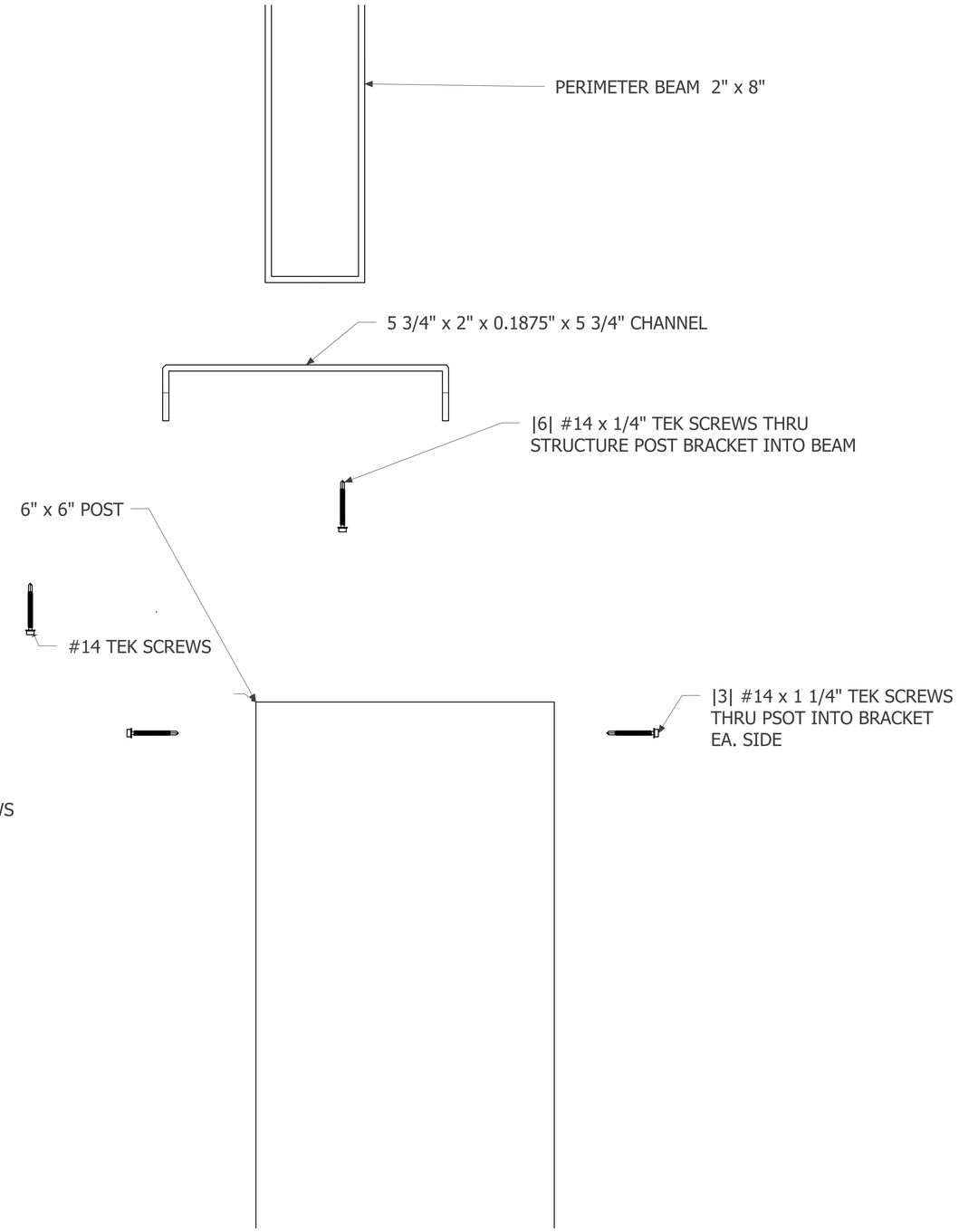

Perry Demming

PRESENTED BY:

KAUFFMAN LAWN FURNITURE

This document has been created exclusively for the advantage of the individual(s) mentioned above and for the project specified on this drawing. Any unauthorized use of this document by a third party or for purposes other than those explicitly outlined is strictly prohibited without the written consent of OutdoorLiving 3D.

DATE ISSUED:

March 13, 2026

ADDRESS

85 DIVISION ST
HUDSON, OH 44236

DRAWING #:

7

PAGE NAME:

POST DETAIL

PAGE #:

A107

ALUMINIUM TYPE:

LOUVERS 6063-T5
ALL OTHER COMPONENTS
6063-T6

7 :: *POST DETAIL*

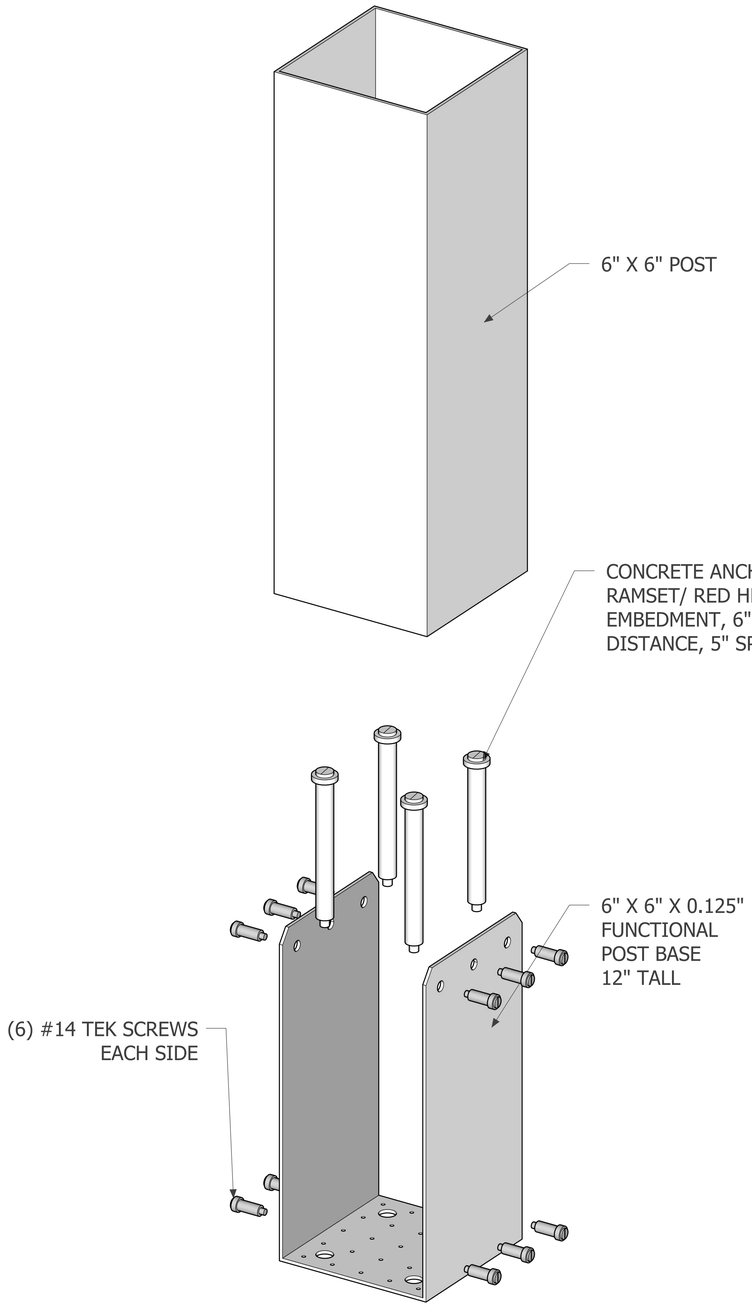

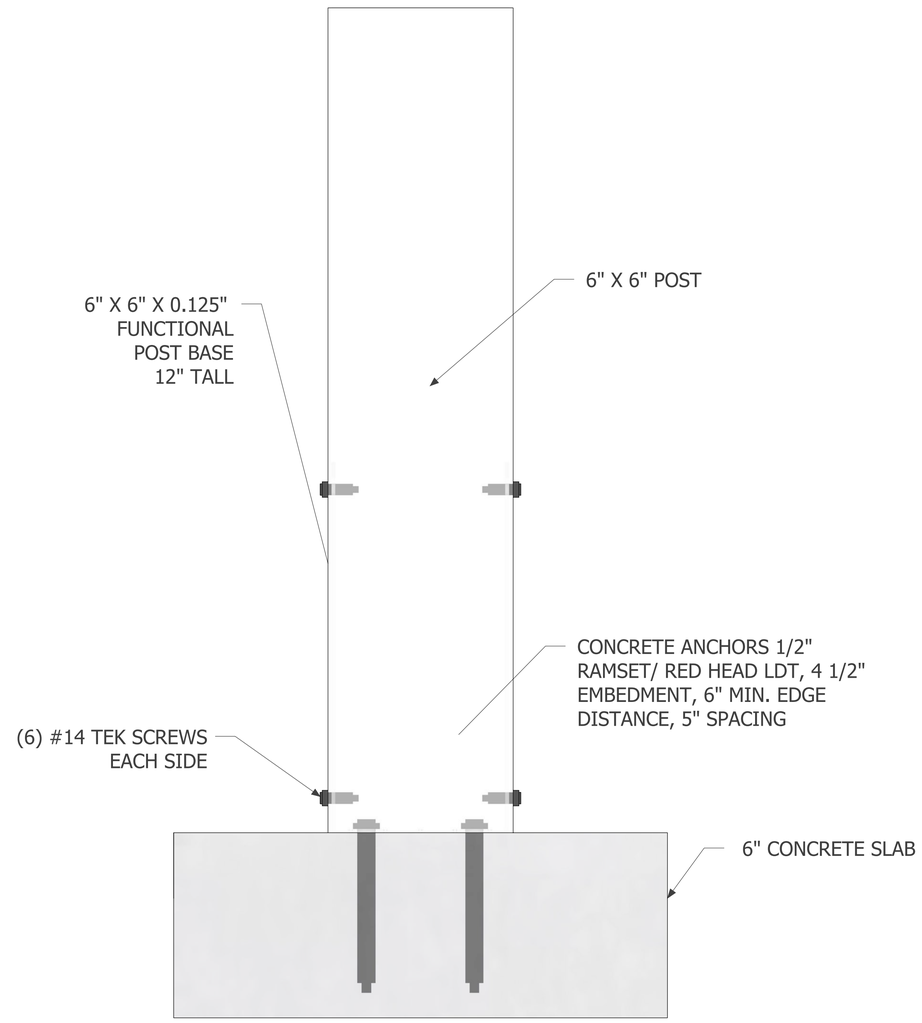

8 ::*FOOTER DETAIL*

Perry Demming

PRESENTED BY:

KAUFFMAN LAWN FURNITURE

This document has been created exclusively for the advantage of the individual(s) mentioned above and for the project specified on this drawing. Any unauthorized use of this document by a third party or for purposes other than those explicitly outlined is strictly prohibited without the written consent of OutdoorLiving 3D.

DATE ISSUED:

March 13, 2026

ADDRESS

85 DIVISION ST
HUDSON, OH 44236

DRAWING #:

8

PAGE NAME:

FOOTER DETAIL

PAGE #:

A108

ALUMINIUM TYPE:

LOUVERS 6063-T5
ALL OTHER COMPONENTS 6063-T6

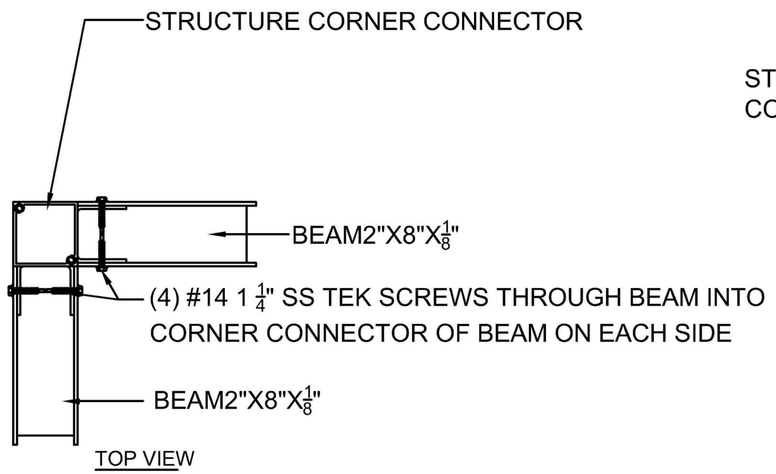

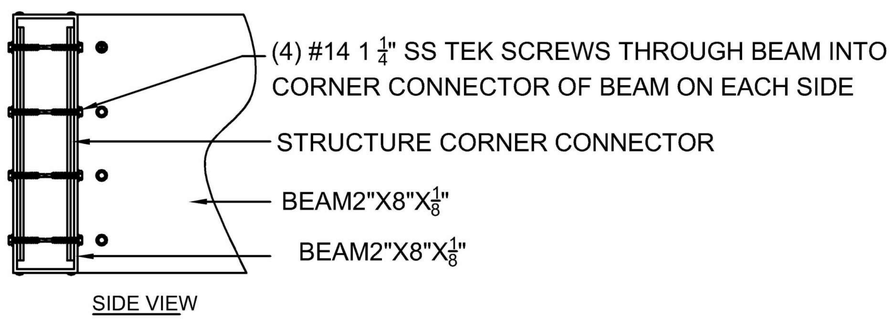

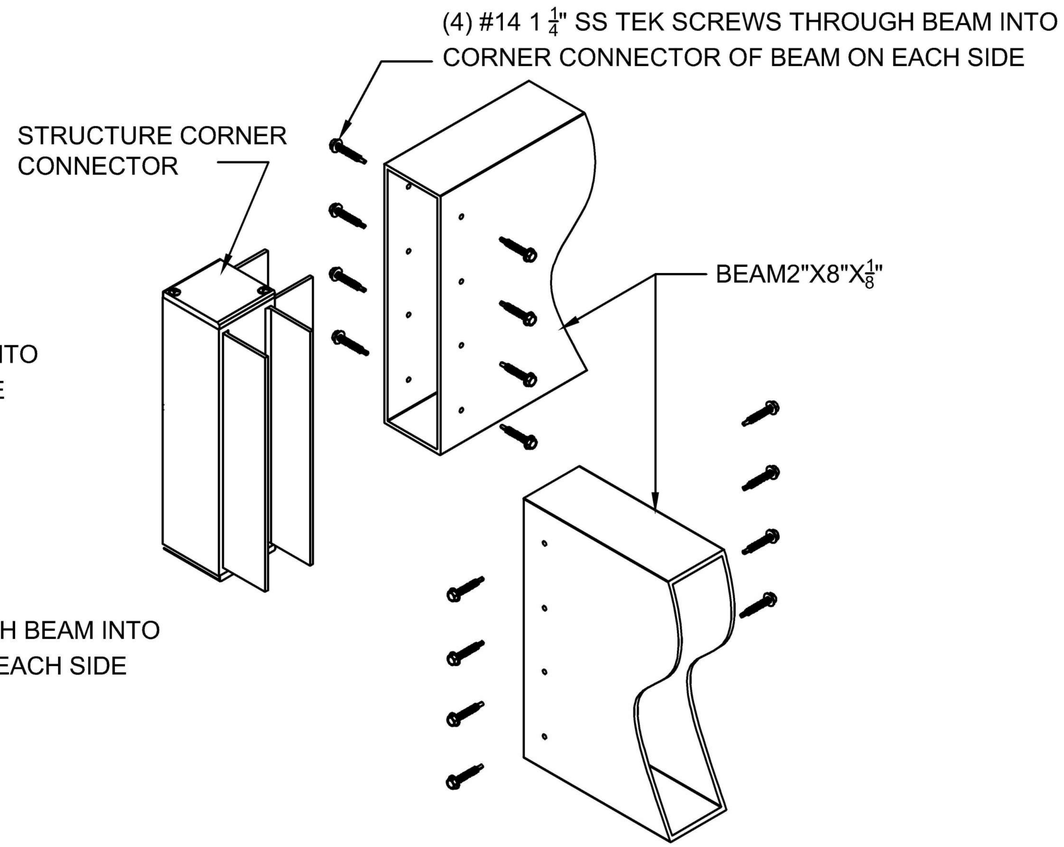

TYPICAL 2"X8" CORNER ASSEMBLY

Perry Demming

PRESENTED BY:

KAUFFMAN LAWN FURNITURE

This document has been created exclusively for the advantage of the individual(s) mentioned above and for the project specified on this drawing. Any unauthorized use of this document by a third party or for purposes other than those explicitly outlined is strictly prohibited without the written consent of OutdoorLiving 3D.

DATE ISSUED:
March 13, 2026

ADDRESS

85 DIVISION ST
HUDSON, OH 44236

DRAWING #:
9

PAGE NAME:
CORNER ASSEMBLY

PAGE #:
A109

ALUMINIUM TYPE:
LOUVERS 6063-T5
ALL OTHER COMPONENTS 6063-T6

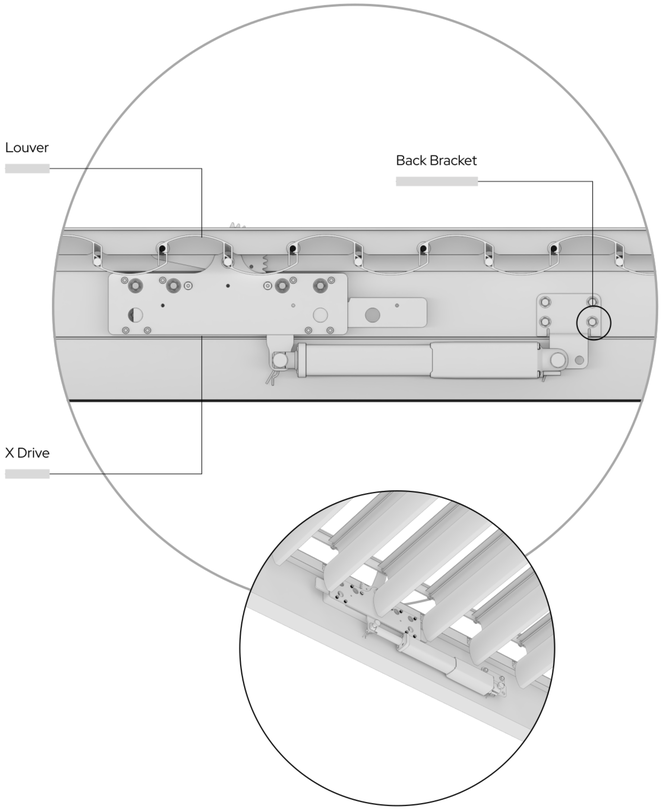

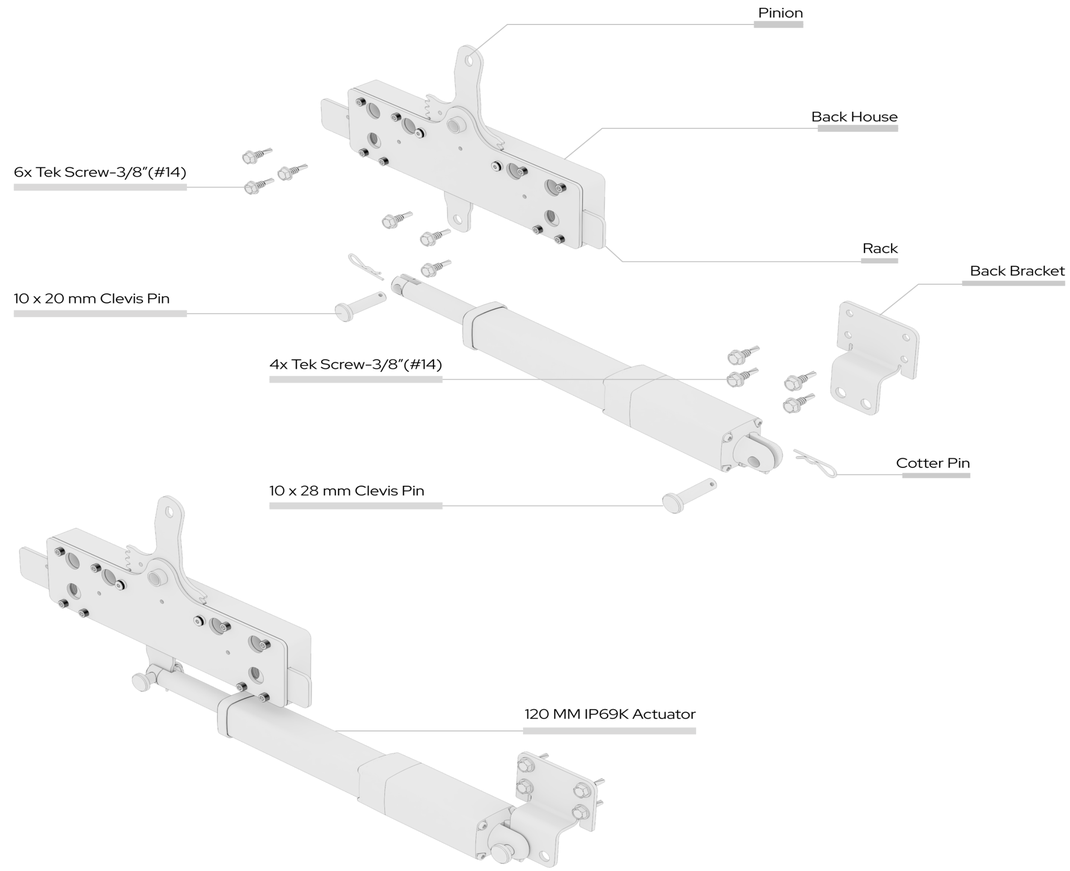

Motor Actuator

Somfy 120 mm

Power Rating	DC24V
Duty Cyrcle	10%, Max.2, Min ON/18 Min OFF
Max Load	Push 2000N
Max Current	3.5 Amp
Water Ingress	IP69

Perry Demming

PRESENTED BY:

KAUFFMAN LAWN FURNITURE

This document has been created exclusively for the advantage of the individual(s) mentioned above and for the project specified on this drawing. Any unauthorized use of this document by a third party or for purposes other than those explicitly outlined is strictly prohibited without the written consent of OutdoorLiving 3D.

DATE ISSUED:
March 13, 2026

ADDRESS

85 DIVISION ST
HUDSON, OH 44236

DRAWING #:
10

PAGE NAME:
DETAIL

PAGE #:
A110

ALUMINIUM TYPE:

LOUVERS 6063-T5
ALL OTHER COMPONENTS 6063-T6

KEF-2882

86